CASE STUDY

126 STELCOR PILES TO 75' FOR A 14 STORY ADDITION TO DRAPER HALL IN NYC

OWNER:
SKA Marin
Great Neck, NY

GENERAL CONTRACTOR:
Procida Construction Corp.
Bronx, NY

INSTALLER:
Posillico Drilling, Inc.
College Point, NY

STRUCTURAL ENGINEER:
Rodney D Gibble Consulting Engineers
New York, NY

GEOTECHNICAL ENGINEER:
GZA GeoEnvironmental Inc.
New York, NY

CIVIL ENGINEER:
Yu & Associates
Elmwood Park, NJ

ARCHITECT:
Dattner Architects
New York, NY

LOADS
85 tons compression (design load)
50 tons tension (design load)

SPECIFICATIONS:
5.5" pile shaft
.476 wall thickness 80 ksi
16" tip or drive plate
14" corrugated grout column
9" solid grout column
8" reverse auger

SOILS + EMBEDMENT DEPTH:
75' and 6" into pile cap

TIME FRAME:
(6) 75' piles were installed per shift

ZERO SPOILS REMOVED AND A FASTER INSTALL TIME IN A LIMITED ACCESS AREA WITH STELCOR

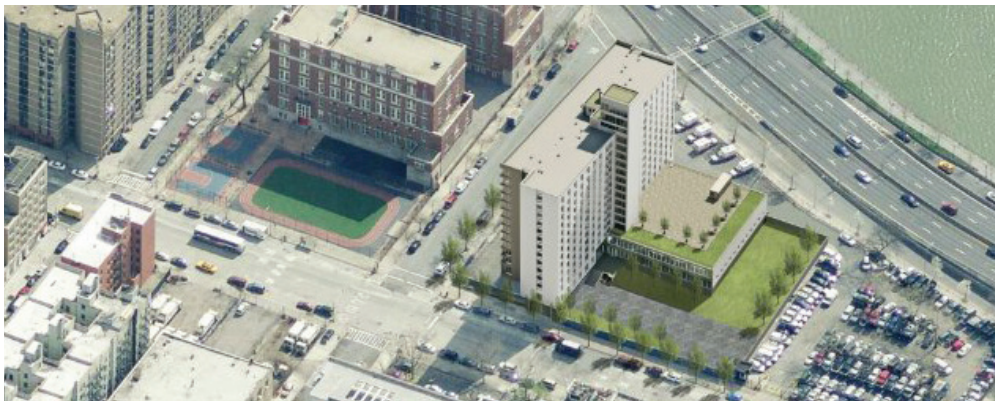

OVERVIEW:
The 14 story Draper Hall, located between Metropolitan Hospital and the East River, combines new construction with substantial rehab to an existing structure. The tower footprint was expanded to allow for double loaded corridors, 201 apartments, and a community center for the city's underserved seniors.

CHALLENGE:
The project was originally spec'd with 12 3/4" micropiles using the traditional installation method and limited access was a concern. Also, the owner needed the piles to be installed quickly in order to stay within the schedule. Furthermore, contaminated soils were present and the cost of removing spoils was a significant concern.

SOLUTION:
IDEAL Group worked with Posillico to offer STELCOR Drilled-In Displacement Micropiles as a cost saving alternate solution on this project. Faster install time meant the project stayed within the schedule. No spoils are created when installing STELCOR piles. This resulted in a significant cost savings. Installation in the limited access area was simplified because because minimal equipment is needed to install STELCOR Drilled-In Displacement Micropiles.

Proactive by Design

GEOTECHNICAL
ENVIRONMENTAL
ECOLOGICAL
WATER
CONSTRUCTION MANAGEMENT

GZA GeoEnvironmental of NY
104 West 29th Street
10th Floor
New York, NY 10001
212.594.8140
www.gza.com

August 6, 2015
GZA Project No. 41.0162028.20

Ms. Sydelle Knepper
Draper Hall Apartments, LLC
98 Cutter Mill Road, Suite 342S
Great Neck, NY 11021

Re: Pile Load Test Report
Draper Hall Addition
New York, NY

Dear Ms. Knepper:

GZA GeoEnvironmental of New York (GZA) is pleased to submit this report presenting the results of the Pile Load Test Program for the above referenced project.

The work described herein was performed in general accordance with our signed contract dated May 11, 2015. The contents for this report are subject to the limitations contained in Appendix A and the terms and conditions of engagement.

BACKGROUND

GZA was initially retained to conduct geotechnical subsurface exploration programs at the site. GZA provided the results of the subsurface explorations in a geotechnical report in 2014[1]. Based on subsurface conditions and constructability issues, drilled micropiles were recommended to support the proposed structure. The micropiles were designed for an 85-ton allowable axial capacity and consisted of a 12.75-inch diameter ½-inch thick wall casing and one #9 grade 75 center bar. The micropiles were designed for a depth of 70 feet below street level (El. -58.5, NAVD88).

The site general contractor (Procida Construction Corporation) retained a piling subcontractor (Posillico Civil) who designed deep foundations consisting of Stelcor drilled-in displacement micropiles. The drilled-in displacement micropile consists of a Stelcor model SC1400-550-16149-8, which is comprised of a 16-inch diameter drive plate at the bottom of a 5.5-inch diameter by 0.475-inch wall steel shaft with 8-inch diameter exterior grout augers. A 14-inch deformation structure is connected immediately above the drive plate. The pile is drilled into the ground in 20-foot long sections that are bolted together. As the pile is drilled, the grout augers pull grout downward into the annulus generated by the deformation structure.

The drilled-in displacement micropiles were designed for an 85-ton allowable axial capacity at a final depth of 70 feet below existing site elevation. The drilled-in displacement micropile details are provided in Appendix B.

[1] GZA Report entitled "Subsurface Exploration and Foundation Engineering Report" dated April 2014.

SCOPE OF WORK

The purpose of the pile load testing program is to confirm allowable axial capacity for the production piles at the site.

GZA provided the following services under the Pile Load Test Program:

- Observed the installation of two (2) test piles and eight (8) reaction piles;
- Observed two (2) compression load tests performed by Posillico in general conformance with ASTM Standards and the 2014 New York City Building Code (NYCBC);
- Analysis of load test results; and
- Preparation of this report.

PILE INSTALLATION

The test piles (TP-1 and TP-2) and the eight reaction piles were installed between June 19 and 25, 2015 by Posillico. A GZA field representative was on site to continuously observe the installation of the test and reaction piles. Grout cube sample testing of the test and reaction piles was performed by others. The location of the test and reaction piles are shown in Appendix B.

The test and reaction piles were all installed to a depth of 77-feet below existing elevation. The installed piles consisted of four 20-foot long sections (80-feet total) with 3-feet of stickup at each pile. The piles were grouted from the surface during installation. A 12-inch diameter by 5-foot long concrete-filled sonotube was installed at the top of each test pile to reduce eccentric loading between the jack and top of the pile. Vibrating wire strain gauges were installed within the center annulus of the test piles at depths of 2, 40, 60, 70, and 77 feet below ground surface.

STATIC LOAD TESTING

Two (2) static compression load tests were performed between July 16 and 24, 2015. The compression test reaction system consisted of a steel reaction frame that transferred the compression load to four (4) reaction piles and included a main beam and two reaction beams. The load frame system was designed by Posillico and was in general accordance with ASTM D1143 and is attached as Appendix C. Four dial gauges were used to measure movements of the pile. The dial gauges were placed on reference beams that extended at least eight feet from the test pile. A piano wire was also installed as a secondary measuring device. Optical level survey was performed on each reaction pile. Photographs of a typical test setup are provided in Appendix D.

A 300-ton capacity hydraulic jack was used to apply compression load to the test pile. Jack calibration records are provided in Appendix E. The strain gauge calibration records are also provided in Appendix E.

Proactive by Design

The compression load tests were performed to 170 tons (200% of the allowable design axial capacity). The compression load tests were performed using the maintained procedure (Procedure B) in accordance with ASTM D1143.

See Appendix F for the complete results from the compression load tests.

RESULTS AND RECOMMENDATIONS

The test results for the two compression load tests were evaluated based on the Davisson (1973) method[2] and our general experience with pile load testing. The pile load test results showed that the maximum allowable axial compressive capacity of the test piles is 75 tons for a pile installed to a depth of 77-feet below grade. The allowable axial capacity can be increased by 33-percent for short term loads (wind or seismic).

If you should have any questions or comments, please contact the undersigned.

Very truly yours,

GZA GEOENVIRONMENTAL OF NEW YORK

Benjamin Cote, P.E
Assistant Project Manager

Alireza Ayoubian, P.E.
Project Manager

Cassandra A. Wetzel, P.E.
Associate Principal

Attachments: Appendix A – Geotechnical Limitations
Appendix B – Pile Location Plan and Details
Appendix C – Test Pile Load Frame Plan
Appendix D – Typical Test Setup Photographs
Appendix E – Hydraulic Jack and Strain Gauge Calibration Records
Appendix F – Compression Load Test Results

[2] Davisson, M.T., 1973, "High Capacity Piles", Innovations in Foundation Construction, Illinois Section of ASCE, Chicago, IL.

Proactive by Design

APPENDIX A

LIMITATIONS

Proactive by Design

LIMITATIONS

Use of Report

1. GZA GeoEnvironmental, Inc. (GZA) prepared this report on behalf of, and for the exclusive use of our Client for the stated purpose(s) and location(s) identified in the Proposal for Services and/or Report. Use of this report, in whole or in part, at other locations, or for other purposes, may lead to inappropriate conclusions; and we do not accept any responsibility for the consequences of such use(s). Further, reliance by any party not expressly identified in the agreement, for any use, without our prior written permission, shall be at that party's sole risk, and without any liability to GZA.

Standard of Care

2. GZA's findings and conclusions are based on the work conducted as part of the Scope of Services set forth in Proposal for Services and/or Report, and reflect our professional judgment. These findings and conclusions must be considered not as scientific or engineering certainties, but rather as our professional opinions concerning the limited data gathered during the course of our work. If conditions other than those described in this report are found at the subject location(s), or the design has been altered in any way, GZA shall be so notified and afforded the opportunity to revise the report, as appropriate, to reflect the unanticipated changed conditions .

3. GZA's services were performed using the degree of skill and care ordinarily exercised by qualified professionals performing the same type of services, at the same time, under similar conditions, at the same or a similar property. No warranty, expressed or implied, is made.

Subsurface Conditions

4. The generalized subsurface conditions provided in our Report are based on widely-spaced subsurface explorations and are intended only to convey trends in subsurface conditions. The boundaries between strata are approximate and idealized, and were based on our assessment of subsurface conditions. The composition of strata, and the transitions between strata, may be more variable and more complex than indicated. For more specific information on soil conditions at a specific location refer to the exploration logs.

5. In preparing this report, GZA relied on certain information provided by the Client, state and local officials, and other parties referenced therein which were made available to GZA at the time of our evaluation. GZA did not attempt to independently verify the accuracy or completeness of all information reviewed or received during the course of this evaluation.

6. GZA's services did not include an assessment of the presence of oil or hazardous materials at the property. Consequently, we did not consider the potential impacts (if any) that contaminants in soil or groundwater may have on construction activities, or the use of structures on the property.

Compliance with Codes and Regulations

7. We used reasonable care in identifying and interpreting applicable codes and regulations. These codes and regulations are subject to various, and possibly contradictory, interpretations. Compliance with codes and regulations by other parties is beyond our control.

Proactive by Design

APPENDIX B

PILE LOCATION PLAN AND DETAILS

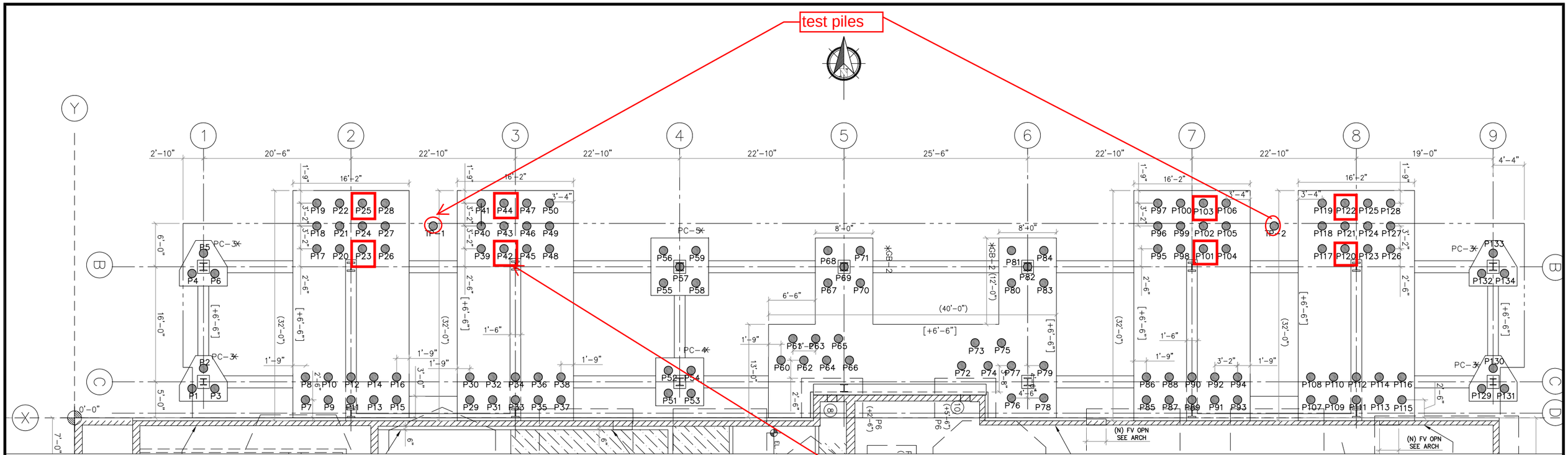

1. Test and reaction piles shown
2. Pile spacing addressed in the Drilled in Displacement Micropile Stelcor Shop Drawing Submittal dated June 1, 2015 page 6, design note #4

PILE OFFSETS FROM ORIGIN

No.	X	Y	No.	X	Y	No.	X	Y	No.	X	Y	No.	X	Y	No.	X	Y
1*	16'-3.83"	4'- 0.75"	24	39'-11.88"	26'-7.88"	47	62'-9.88"	29'-9.88"	70*	109'-1.87"	18'-8.87"	93	158'-4.83"	2'-5.99"	116	184'-4.87"	5'-7.99"
2*	17'-10.96"	6'-10.52"	25R	39'-11.88"	29'-9.88"	48	65'-11.87"	23'-5.88"	71*	109'-1.87"	23'-2.87"	94	161'-6.81"	5'-7.99"	117	173'-3.88"	23'-5.88"
3*	17'-3.5"	4'-0.75"	26	43'-1.87"	23'-5.88"	49	65'-11.87"	26'-7.88"	72*	123'-2.92"	7'-3.00"	95	161-6.81"	23'-5.88"	118	173'-3.88"	26'-7.88"
4*	16'-3.83"	20'-0.62"	27	43'-1.87"	26'-7.88"	50	65'-11.87"	29'-9.88"	73*	125'-1.19"	10'-5.01"	96	150'-5.83"	26'-7.88"	119	173'-3.88"	29'-9.88"
5*	17'-10.96"	22'-10.39"	28	43'-1.87"	29'-9.88"	51*	82'-5.87"	3'-5.00"	74*	126'-10.92	7'-3.00"	97	150'-5.83"	29'-9.88"	120R	176'-5.88"	23'-5.88"
6*	19'-5.83"	20'-.062"	29	54'-10.88"	2'-5.99"	52*	82'-5.87"	6'-7.00"	75*	128'-9.19"	10'-5.01"	98	150'-7.83"	23'-5.88"	121	176'-5.88"	26'-7.88"
7	32'-0.88"	2'-5.99"	30	54'-10.88"	5'-7.99"	53*	85'-7.87"	3'-5.00"	76*	130'-1.87"	2'9.00"	99	153'-7.83"	26'-7.88"	122R	176'-5.88"	29'-9.88"
8	32'-0.88"	5'-8.00"	31	58'-0.88"	2'-5.99"	54*	85'-7.87"	6'-7.00"	77*	130'-1.87"	7'-3.00"	100	153'-7.83"	29'-9.88"	123	179'-7.88"	23'-5.88"
9	35'-2.88"	2'-6.00"	32	58'-0.88"	5'-7.99"	55*	81'-9.87"	18'-8.87"	78*	134'-7.87"	2'-9.00"	101R	156'-9.83"	23'-5.88"	124	179'-7.88"	26'-7.88"
10	35'-2.88"	5'-8.0"	33	61'-2.88"	2'-5.99"	56*	81'-9.87"	23'-2.87"	79*	134'-7.87"	7'-3.00"	102	156'-9.83"	26'-7.88"	125	179'-7.88"	29'-9.88"
11	28'-4.88"	2'-6.00"	34	61'-2.88"	5'-7.99"	57*	84'-0.87"	20'-11.87"	80*	130'-1.87"	18'-8.87"	103R	156'-9.83"	29'-9.88"	126	182'-9.87"	23'-5.88"
12	38'-4.88"	5'-8.00"	35	64'-4.88"	2'-5.99"	58*	86'-3.87"	18'-8.87"	81*	130'-1.87"	23'-2.87"	104	159'-11.81	23'-5.88"	127	182'-9.87"	26'-7.88"
13	41'-6.88"	2'-6.00"	36	64'-4.88"	5'-7.99"	59*	86'-3.87"	23'-2.87"	82*	132'-4.87"	20'-11.87"	105	159'-11.81	26'-7.88"	128	182'-10.03	29'-9.88"
14	41'-6.88"	5'-8.00"	37	67'-6.87"	2'-5.99"	60*	98'-1.75"	8'-0.00"	83*	134'-7.87"	18'-8.87"	106	159'-11.81	29'-9.88"	129*	195'-5.82"	4'-0.74"
15	44'-8.87"	2'-6.00"	38	67'-6.87"	5'-7.99"	61*	99'-9.53"	11'-0.01"	84*	134'-7.87"	23'-2.87"	107	171'-8.88"	2'-5.99"	130*	197'-0.95"	6'-10.52"
16	44'-8.87"	5'-8.00"	39	56'-5.88"	23'-5.88"	62*	101'-3.75"	7'-11.99"	85	148'-10.83	2'-5.99"	108	171'-8.88"	5'-7.99"	131*	198'-7.82"	4'-0.74"
17	33'-7.88"	23'-5.88"	40	56'-5.88"	26'-7.88"	63*	102'-11.53	11'-0.01"	86	148'-10.83	5'-7.99"	109	174'-10.88	2'-5.99"	132*	195'-5.82"	20'-0.62"
18	33'-7.88"	26'-7.88"	41	56'-5.88"	29'-9.88"	64*	104'-5.75"	8'-0.01"	87	152'-0.83"	2'-5.99"	110	174'-10.88	5'-7.99"	133*	197'-0.95"	22'-10.39"
19	33'-7.88"	29'-9.88"	42R	59'-7.88"	23'-5.88"	65*	106'-1.53"	11'-0.04"	88	152'-0.83"	5'-7.99"	111	178'-0.88"	2'-5.99"	134*	198'-7.82"	20'-0.62"
20	36'-9.88"	23'-5.88"	43	59'-7.88"	26'-7.88"	66*	107'-7.75"	8'-0.01"	89	155'-2.83"	2'-5.99"	112	178'-0.88"	5'-7.99"	TP-1	49'-9.87"	26'-7.88"
21	36'-9.88"	26'-7.88"	44R	59'-7.88"	29'-9.88"	67*	104'-7.78"	18'-8.87"	90	155'-2.83"	5'-7.99"	113	181'-2.88"	2'-5.99"	TP-2	166'-7.87"	26'-7.88"
22	36'-9.88"	29'-9.88"	45	62'-9.88"	23'-5.88"	68*	104'-7.78"	23'-2.87"	91	158'-4.83"	2'-5.99"	114	181'-2.88"	5'-7.99"			
23R	39'-11.88"	23'-5.88"	46	62'-9.88"	26'-7.88"	69*	106'-10.87	20'-11.87"	92	158'-4.83"	5'-7.99"	115	184'-4.87"	2'-5.99"			

x NO EXCEPTIONS TAKEN
¨ REVISE AS NOTED
¨ REJECTED ¨ REVISE AND RESUBMIT
¨ EXAMINED

Revisions as Noted or comments made on the shop drawings during this review do not relieve contractor from compliance with requirements of the drawings and specifications. This check is only for review of general conformance with the design concept of the project and general compliance with the information given in contract documents. The contractor is responsible for confirming and correlating all quantities and dimensions, selecting fabrication processes and techniques of construction, coordinating work with all other trades and performing his work in safe satisfactory manner.

Geoenvironmental of New York
104 West 29th Street, New York, NY 10001
Date: June 11, 2015 By: AA/GAW

NOTES:
1. PILE LOCATIONS ARE PER OFFSET FROM ORIGIN POINT IN BOTTOM LEFT OF ABOVE LAYOUT.
2. ORIGIN POINT TO BE STAKED OUT BY MONTROSE SURVEYING, PER PROCIDA CONSTRUCTION CORP.
3. A FINAL COPY OF THIS PLAN WILL BE SUBMITTED WITH COORDINATES OF AS BUILT PILE LOCATIONS.
4. ASTERISKS NEXT TO PILE ID INDICATE NO TOP PLATE REQUIRED.
5. R NEXT TO PILE ID INDICATE THE PILE IS TO BE A REACTION PILE IN THE LOAD TEST.

DRAFT

Posillico | We know how.™

Posillico Civil
131-36A 20th Avenue
College Point, New York 11356
(718) 353-9616

Project
DRAPER HALL

Title
PILE ID PLAN - DRAFT

Revisions

No	Date	By	Description
1	5/15/15	GS	BY ORIGIN
2	6/5/15	tc	

Drilled–in Displacement Micropile 85 Tons

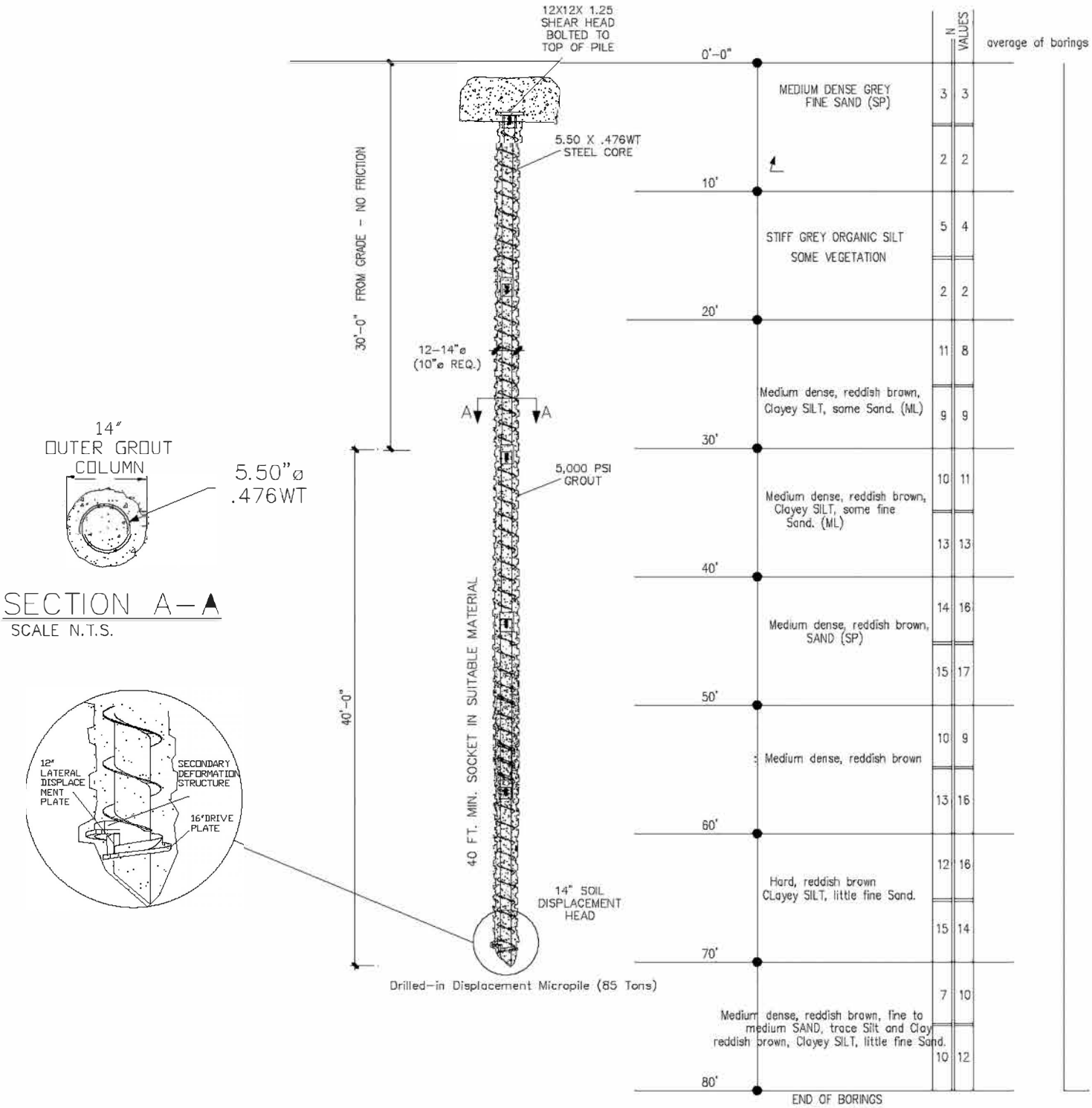

5 1/2" BOLTED NEW CONSTRUCTION BRACKET

PART NO. 512NCB12X125

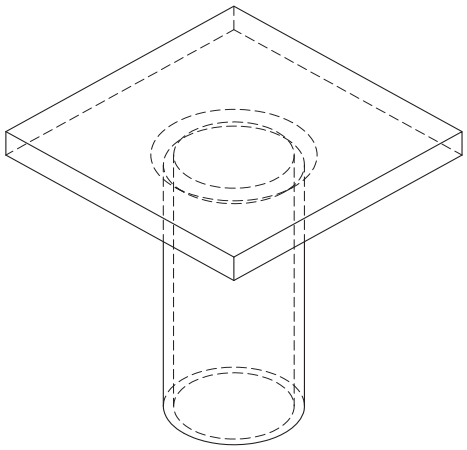

NOTES:

1. SHAFT TO EXCEED REQUIREMENTS TO MINIMUM YIELD STRENGTH OF 55 KSI AND MINIMUM TENSILE STRENGTH OF 75 KSI.

2. ALL WELDING TO BE PERFORMED BY SHOP QUALIFIED WELDER TO AWS D1.1 STRUCTURAL WELDING CODE - STEEL.

3. ULTIMATE STRUCTURAL CAPACITY OF THE UNIT IS DEPENDANT ON FINAL DESIGN

4. BOLT-ON OPTION AVAILABLE WHERE UPLIFT LOADS ARE PRESENT

5. BY IDEAL MANUFACTURING INC. 1-800-789-4810.

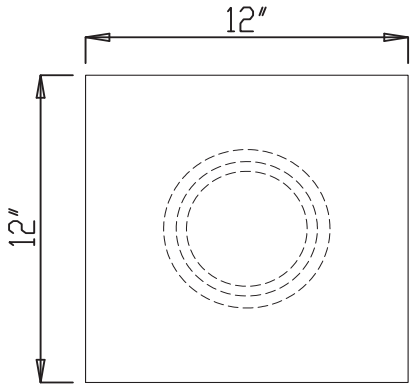

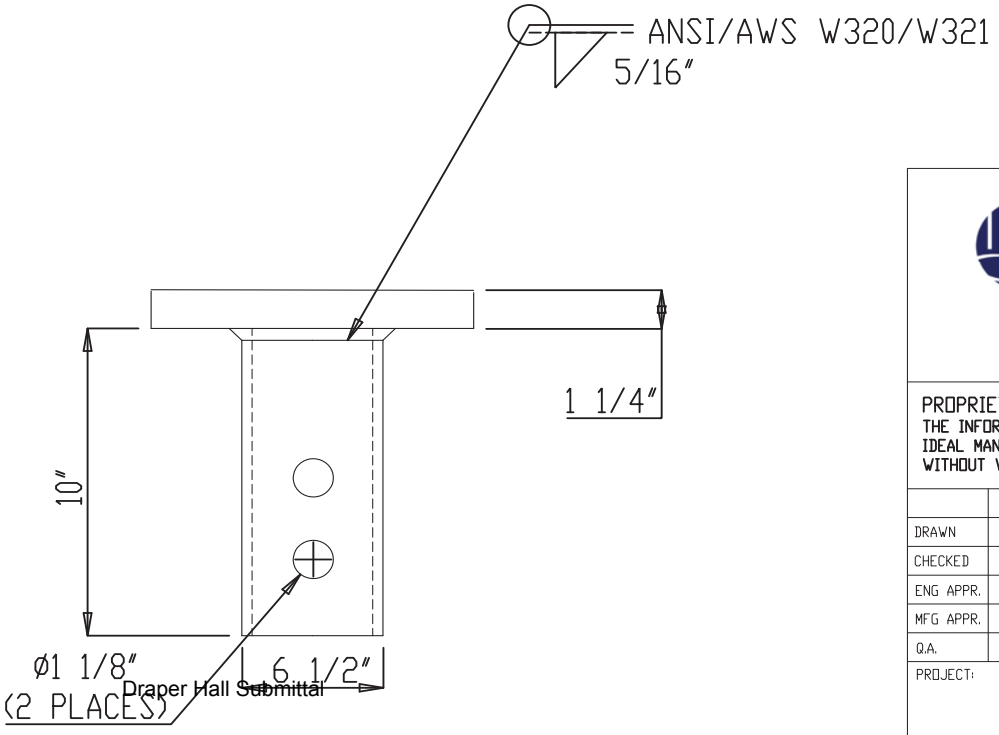

iDEAL Group

	NAME	DATE
DRAWN	BGS	10/01/14
CHECKED		
ENG APPR.		
MFG APPR.		
Q.A.		
PROJECT:		

IDEAL MANUFACTURING, INC.
999 PICTURE PARKWAY
WEBSTER, NY 14580
800-789-4810

DO NOT SCALE DRAWING

FINISH

MATERIAL

DRAWING NO. 512NCB12X125

REV.

SIZE A

WEIGHT:

SHEET 1 OF 1

STELCOR SC1400EXT-550 5.50" X .476w DRILLED-IN DISPLACEMENT MICROPILE EXTENSION SECTION

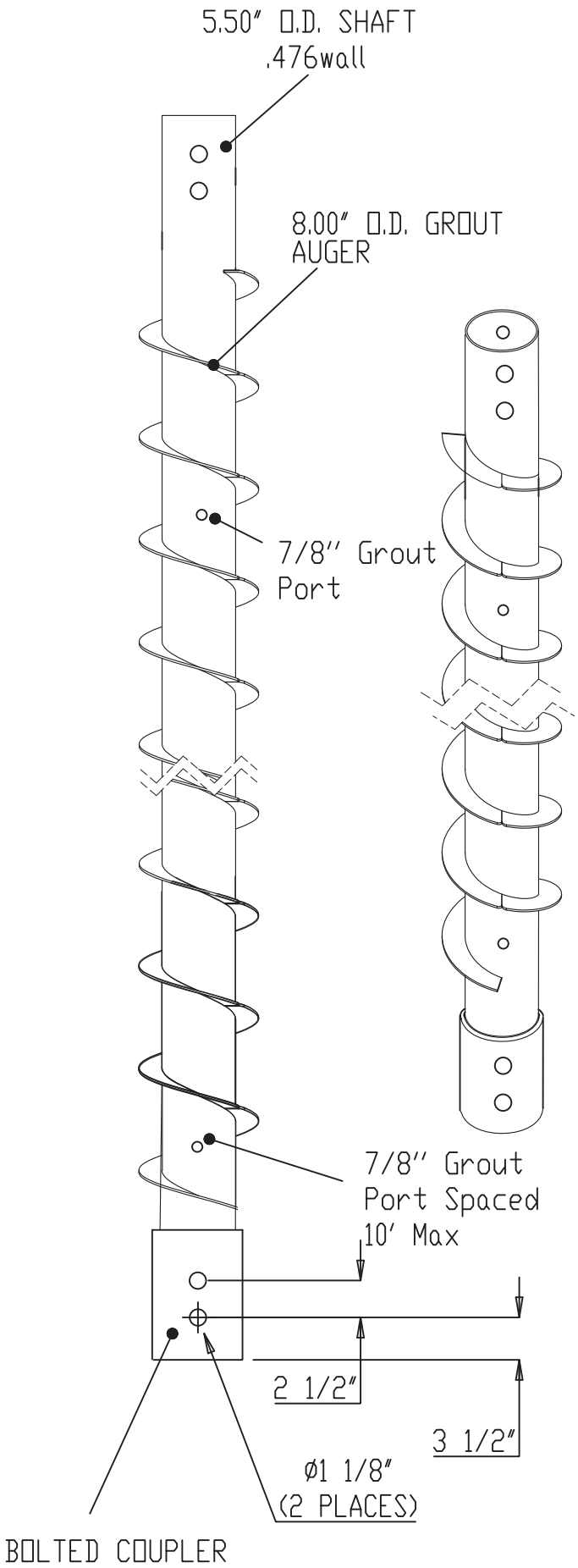

NOTES:

1. DISPLACEMENT DRILLED, FULL LENGTH STEEL CORE WITH SOLID GROUT FILL AND UNCASED OUTER GROUT COLUMN.
2. GROUT COLUMN DEFORMATION SHALL BE NOMINAL 14" O.D.
3. STEEL CORE SHALL BE 5.50" O.D. .476W 80 KSI MIN. YLD. - FULL LENGTH
4. LATERAL DISPLACEMENT DRILL HEAD SHALL BE FABRICATED OF ASTM A572 GR. 50 PARTS.
5. ALL WELDING TO BE PERFORMED BY CERTIFIED WELDER IN ACCORDANCE WITH AWS D1.1 - STRUCTURAL WELDING CODE- STEEL
6. OPTIONAL THREADBAR IN CENTER OF STEEL CORE

	NAME	DATE
DRAWN	BJS	10/30/14
CHECKED		
ENG APPR.		
MFG APPR.		
Q.A.		

PROJECT:

IDEAL MANUFACTURING, INC.
999 PICTURE PARKWAY
WEBSTER, NY 14580
800-789-4810

DO NOT SCALE DRAWING

FINISH

MATERIAL

DRAWING NO. IDL-SC1400EXT

REV.

SIZE A

WEIGHT:

SHEET 1 OF 1

STELCOR
SC1400-550-16149-8
5.50" X .476w DRILLED-IN DISPLACEMENT MICROPILE

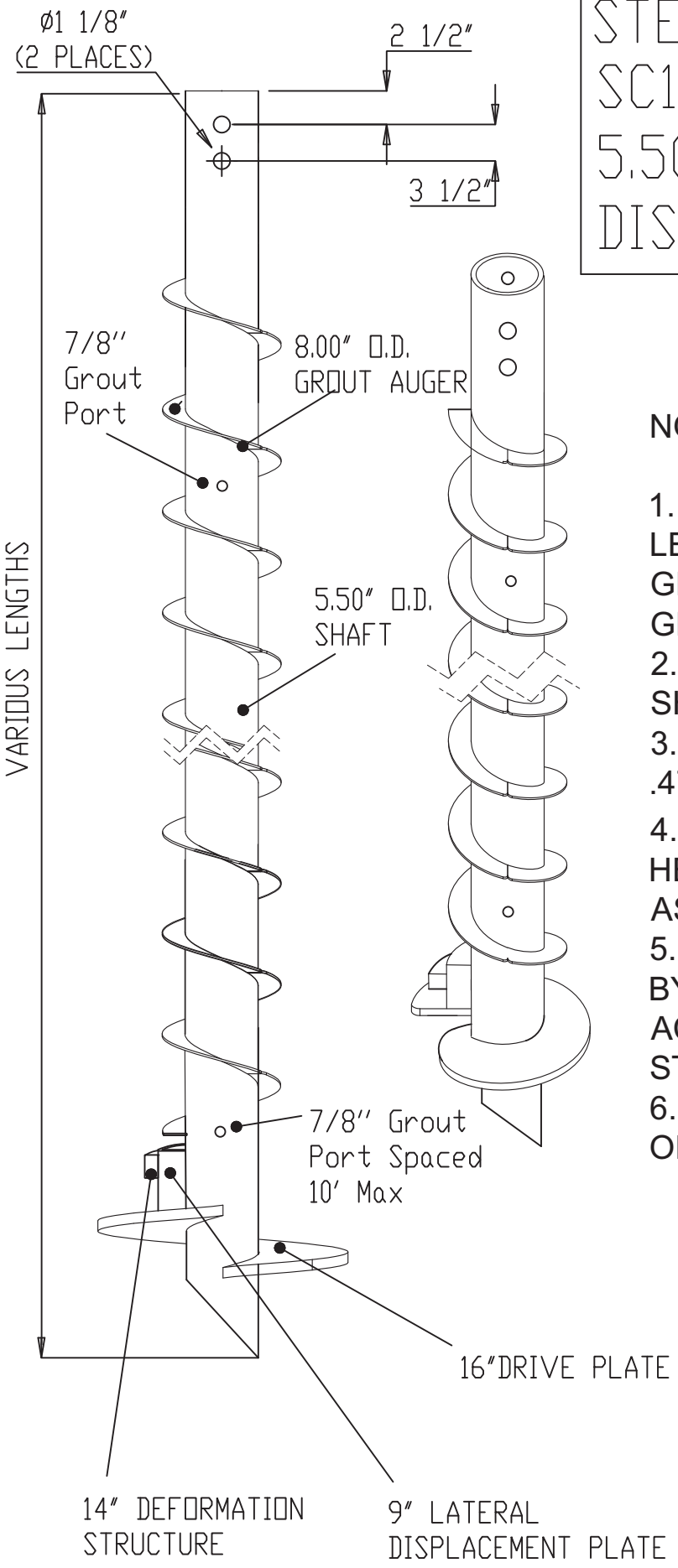

NOTES:

1. DISPLACEMENT DRILLED, FULL LENGTH STEEL CORE WITH SOLID GROUT FILL AND UNCASED OUTER GROUT COLUMN.
2. GROUT COLUMN DEFORMATION SHALL BE NOMINAL 14" O.D.
3. STEEL CORE SHALL BE 5.50" O.D. .476W 80 KSI MIN. YLD. - FULL LENGTH
4. LATERAL DISPLACEMENT DRILL HEAD SHALL BE FABRICATED OF ASTM A572 GR. 50 PARTS.
5. ALL WELDING TO BE PERFORMED BY CERTIFIED WELDER IN ACCORDANCE WITH AWS D1.1 - STRUCTURAL WELDING CODE- STEEL
6. OPTIONAL THREADBAR IN CENTER OF STEEL CORE

	NAME	DATE
DRAWN	BJS	11/24/14
CHECKED		
ENG APPR.		
MFG APPR.		
Q.A.		

PROJECT:

IDEAL MANUFACTURING, INC.
999 PICTURE PARKWAY
WEBSTER, NY 14580
800-789-4810

DO NOT SCALE DRAWING

FINISH

MATERIAL

DRAWING NO. IDL-SC1400 REV.

SIZE A WEIGHT: SHEET 1 OF 1

Proactive by Design

APPENDIX C

TEST PILE LOAD FRAME PLAN

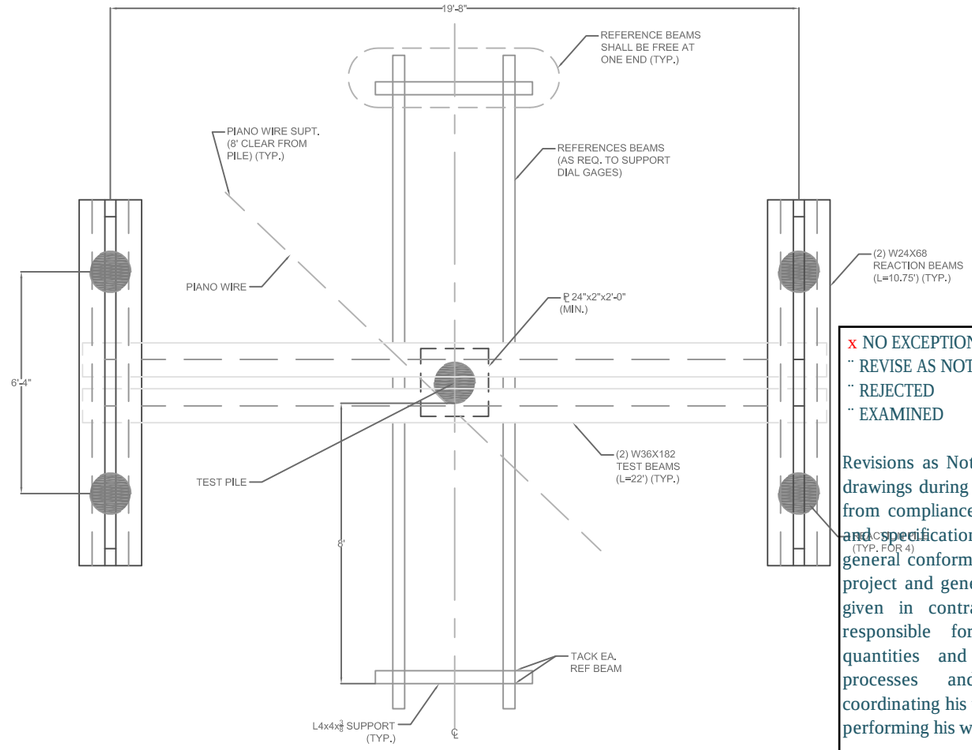

PLAN

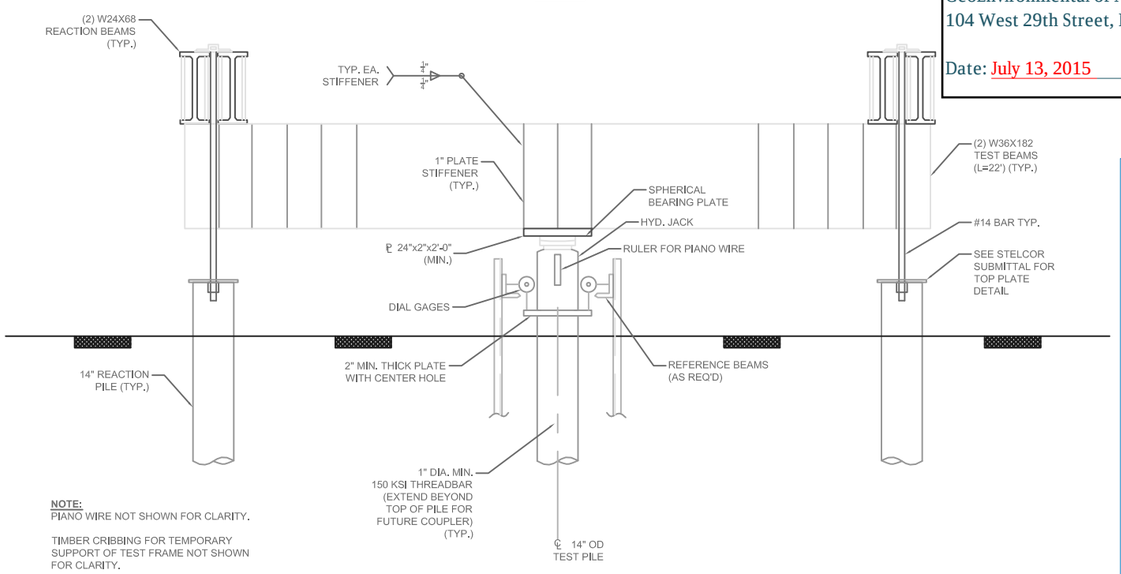

NOTE:
PIANO WIRE NOT SHOWN FOR CLARITY.

TIMBER CRIBBING FOR TEMPORARY SUPPORT OF TEST FRAME NOT SHOWN FOR CLARITY.

ELEVATION

x NO EXCEPTIONS TAKEN
¨ REVISE AS NOTED
¨ REJECTED ¨ REVISE AND RESUBMIT
¨ EXAMINED

Revisions as Noted or comments made on the shop drawings during this review do not relieve contractor from compliance with requirements of the drawings and specifications. This check is only for review of general conformance with the design concept of the project and general compliance with the information given in contract documents. The contractor is responsible for confirming and correlating all quantities and dimensions, selecting fabrication processes and techniques of construction; coordinating his work with that of all other trades and performing his work in safe satisfactory manner.

GeoEnvironmental of New York
104 West 29th Street, New York, NY 10001

Date: July 13, 2015 By: BMC/CAW

GENERAL:

1. CONTRACTOR SHALL COMPLETE STATIC AXIAL COMPRESSION LOAD TESTS ON 14" NOMINAL DIAMETER STELCOR PILES.

   THE COMPRESSIVE DESIGN LOAD FOR THE TEST PILES IS EIGHTY-FIVE (85) TONS.

2. THESE TESTS SHALL BE PERFORMED AT LOCATIONS APPROVED (SEE PILE ID PLAN)
3. CONTRACTOR SHALL INSTALL FOUR (4) 14" DIAMETER STELCOR REACTION PILES TO SUPPORT THE TEST FRAME BEAMS AS INDICATED.
4. INSTALL THE TEST FRAME AS SHOWN HEREIN.
5. INSTALL STEEL PLATES, HYDRAULIC JACK, DIAL GAGES, WIRE SCALE, ETC. AS SHOWN HEREIN.
6. THE LOAD TEST LOADING PROCEDURE SHALL BE IN ACCORDANCE WITH ASTM SPECIFICATION D1143-07, PARAGRAPH 8.1.3. "PROCEDURE B: MAINTAINED"
7. THE LOAD TEST READINGS SHALL BE TAKEN IN ACCORDANCE WITH ASTM SPECIFICATION D1143-07, PARAGRAPH 8.2.3. "PROCEDURE B: MAINTAINED"
8. REFERENCE: "DRILLED IN DISPLACEMENT MICROPILE STELCOR SHOP DRAWING SUBMITTAL"

MATERIALS:

1. ALL TEST AND REACTION BEAMS SHALL BE IN ACCORDANCE WITH ASTM A36 STEEL, AND SHALL BE OF THE MINIMUM SIZE AND SECTION INDICATED.
2. ALL STEEL PLATES SHALL BE IN ACCORDANCE WITH ASTM A36 AND SHALL BE OF THE MINIMUM SIZE INDICATED.
3. ALL WELDING SHALL BE IN ACCORDANCE WITH AWS "STRUCTURAL WELDING CODE- STEEL D1.1", LATEST EDITION

   ELECTRODES USED SHALL E70XX

4. ALL TEST AND REACTION PILES SHALL BE INSTALLED IN ACCORDANCE WITH APPROVED SHOP DRAWINGS
5. FABRICATION OF TEST FRAME BEAMS, TRANSFER BEAMS, STIFFENERS, ETC. SHALL BE IN ACCORDANCE WITH AISC SPECIFICATIONS.
6. HYDRAULIC JACKS SHALL BE EQUIPPED WITH THE NECESSARY GAGES AND ACCESSORIES TO TRANSMIT CONSTANT LOAD TO THE TEST PILE.

   HYDRAULIC JACKS SHALL BE RATED FOR A LOAD CAPACITY OF AT LEAST 1.15 TIMES THE MAXIMUM TEST LOAD.

   THE HYDRAULIC JACK AND PRESSURE GAGE SHALL BE CALIBRATED AS A SET BY A CERTIFIED TESTING LABORATORY WITHIN ONE (1) MONTH PRIOR TO PERFORMING THE LOAD TEST. CONTRACTOR SHALL SUBMIT THE CALIBRATION REPORT TO THE ENGINEER PRIOR TO PERFORMING THE LOAD TEST.

7. ALL DIAL GAGES SHALL BE CAPABLE OF BEING READ ACCURATELY TO THE NEAREST 0.001 INCH, AND SHALL HAVE A MINIMUM OF THREE (3) INCHES OF TRAVEL.

PILE LOAD TEST:

1. INSTALL THE TEST PILES FROM APPROXIMATE ELEVATION 7.50.
2. ALLOW THE TEST PILE AND REACTION PILES TO CURE UNTIL THE GROUT ACHIEVES A MINIMUM COMPRESSIVE STRENGTH OF 4,000 PSI, AS VERIFIED BY GROUT CUBE TEST PRIOR TO LOADING.
3. USE 12X12 TIMBERS, AS REQUIRES, TO TEMPORARILY SUPPORT THE TEST FRAME DURING ERECTION.
4. INSTALL STEEL PLATES, HYDRAULIC JACK, REFERENCE BEAMS, DIAL GAGES, PIANO WIRE, AND SURVEY LEVEL SCALES.
5. PERFORM THE COMPRESSION LOAD TEST IN ACCORDANCE WITH THE COMPRESSION LOAD TEST SCHEDULE SHOWN.

   THE MAXIMUM COMPRESSIVE TEST LOAD SHALL BE 170 TONS(2 X DL). DL= 85TONS MEASURE PILE SETTLEMENT WITH A MINIMUM OF THREE (3) DIAL GAGES MOUNTED AN INDEPENDENT STEEL REFERENCE FRAME.

   IN ADDITION, MEASURE SETTLEMENT USING A MIRROR, PIANO WIRE, AND SCALE CAPABLE OF BEING READ ACCURATELY TO THE NEAREST 0.02 INCHES.

   PROVIDE INDEPENDENT SURVEY LEVEL MEASUREMENT OF THE PILE AND REACTION PILES USING OPTICAL LEVEL SURVEY EQUIPMENT CAPABLE OF BEING READ ACCURATELY TO THE NEAREST 0.005 FEET.

Procida
Construction Corp.

PROJECT NAME Draper Hall

SUBMITTAL # 023010-02-2

ITEM Pile Load Test

TRADE Piles

THIS REVIEW IS MADE ONLY FOR THE GENERAL CONFORMANCE OF THIS DOCUMENT TO THE CONTRACT DOCUMENTS. PROCIDA DOES NOT ASSUME ANY RESPONSIBILITY FOR DESIGN INTENT, CALCULATIONS OR CODE COMPLIANCE.

REVIEWED BY JF

DATE 7/9/15

Posillico | We know how.™

COMPRESSION LOAD TEST SCHEDULE (85 TONS)			
% DL	LOAD (TONS)	HOLD TIME	READING SEQUENCE
25	21.25	1 HOUR MINIMUM PROCEED TO NEXT INCREMENT (ANY TIME AFTER 1 HOUR) IF SETTLEMENT RATE <0.01"/HR. BUT NO MORE THAN 2 HOURS	1/2, 1, 2, 4, 8, 15 AND EVERY 15 MINUTES THERE AFTER.
50	42.50		
75	63.75		
100	85.00		
125	106.25		
150	127.50		
175	148.75		
200	170.00	24 Hour Hold	AS ABOVE TO 1 HOUR, THEN HOURLY AFTER
150	127.50	1 HOUR	1/2, 1, 2, 4, 8, 15 AND EVERY 15 MINUTES THERE AFTER.
100	85.00	1 HOUR	
50	42.50	1 HOUR	
0	0.00	24 HOUR	

Hold Max Load of 200%DL for 24 hours (NYC Building Code 1808.4.1.5.1)

Revisions/Issues			
No	Date	By	Description
1	6/16/2015	EG	REVISED AS PER GZA COMMENTS 5/28/15
2	7/6/2015	EG	REVISED AS PER GZA COMMENTS 7/6/15

DRAPER HALL
PILE LOAD TEST

SCALE: NTS.

DWN. BY: RT | CHK'D BY: GS | DATE: 2015-05-18

Posillico Civil
131-36A 20th Avenue
College Point, New York 11356
(718) 353-9616

Proactive by Design

APPENDIX D

TYPICAL TEST SETUP PHOTOGRAPHS

Proactive by Design

Photo 1: Typical Load Test Setup

Photo 2: Typical Jack and Dial Gauge Measurement Setup

Proactive by Design

APPENDIX E

HYDRAULIC JACK AND STRAIN GAUGE CALIBRATION RECORDS

WB EQUIPMENT SERVICE COMPANY
127 OAK STREET
WOODRDIGE, NJ 07075
201 438-7800

CALIBRATION REPORT

Date: 07/07/15

W.B. EQUIPMENT SERVICE CO. INC NO: _____

CUSTOMER: POSILLICO DRILLING PO # _____

CYLINDER: 300 TONS STROKE: 6 SERIAL NO. WB 1811

GAUGE: 6 INCH DIAMETER: 10000 PSI SERIAL NO: WB 2136

CYLINDER FORCE	GAUGE READINGS-PSI		AVERAGE PRESSURE
TONS	AT RAM EXTENSIONS		PSI
	2 INCHES	6 INCHES	
0	0	0	0
17	600	600	600
34	1050	1050	1050
51	1475	1475	1475
68	1900	1900	1900
85	2350	2350	2350
102	2775	2775	2775
119	3200	3200	3200
136	3625	3625	3625
153	4075	4075	4075
170	4500	4500	4500

TEST PERFORMED BY:STEPHEN CIRECO

OUTPUT MEASURED BY LOADCELLSERIAL NUMBER D WITH STRAIN INDICATOR P3
SERIAL NUMBER 158559

W. B. EQUIPMENT SERVICE CO. INC
127 OAK STREET
WOODRIDGE, NJ 07075
201 438 7800

PRESSURE VS FORCE

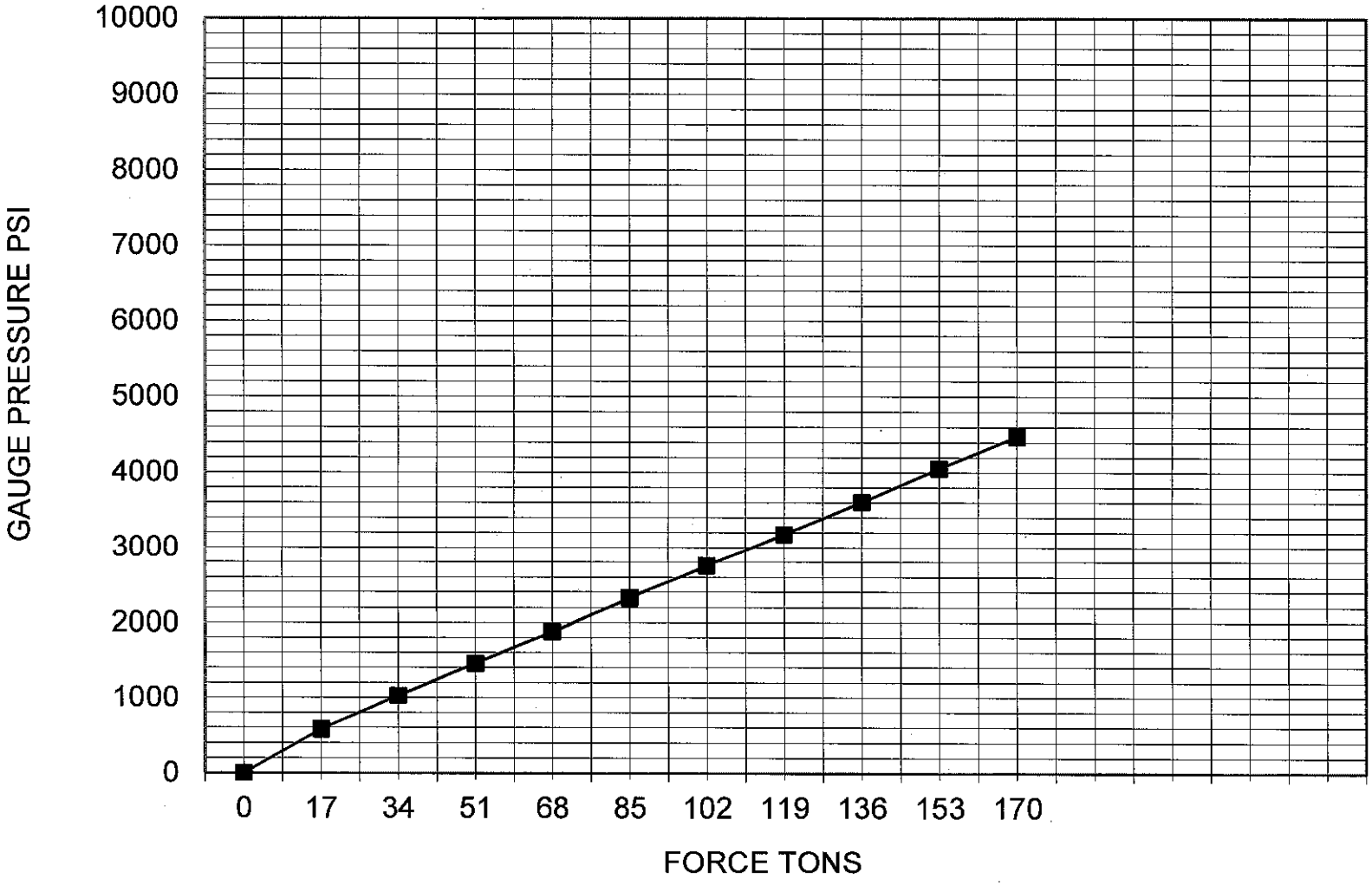

TEST PERFORMED BY: STEPHEN CIRECO
OUTPUT MEASURED BY LOADCELL SERIAL NUMBER D WITH STRAIN INDICATOR P3 SERIAL NUMBER 158559

W. B. EQUIPMENT SERVICE CO. INC.
127 OAK STREET
WOOD RIDGE, NJ 07075
TEL: 201-438-7800 FAX: 201-438-7830

GAUGE CERTIFICATION

W. B. EQUIPMENT SERVICE CO NO:_____ DATE:7/7/15

CUSTOMER: POSILLICO DRILLING

ORDER NO: _____

GAUGE SERIAL NO:	CAPACITY	
WB 2121	10000	PSI
_____	6 INCH	DIAL

WE CERTIFY THAT THE HYDRAULIC GAUGES LISTED ABOVE HAVE BEEN TESTED PRIOR TO SHIPMENT AND FOUND TO BE WITHIN STANDARD COMMERCIAL ACCURACY OF 2% PLUS-OR-MINUS OF FULL SCALE.

VERY TRULY YOURS,
W. B. EQUIPMENT SERVICE CO. INC.

STEPHEN CIRECO

WB EQUIPMENT SERVICE COMPANY
127 OAK STREET
WOODRDIGE, NJ 07075
201 438-7800

CALIBRATION REPORT

Date: 07/07/15

W.B. EQUIPMENT SERVICE CO. INC NO: _____

CUSTOMER: POSILLICO DRILLING PO # _____

CYLINDER: 300 TONS STROKE: 6 SERIAL NO. WB 1808

GAUGE: 6 INCH DIAMETER: 10000 PSI SERIAL NO: WB 2121

CYLINDER FORCE	GAUGE READINGS-PSI		AVERAGE PRESSURE
TONS	AT RAM EXTENSIONS		PSI
	2 INCHES	6 INCHES	
0	0	0	0
17	575	575	575
34	1025	1025	1025
51	1450	1450	1450
68	1875	1875	1875
85	2325	2325	2325
102	2750	2750	2750
119	3175	3175	3175
136	3600	3600	3600
153	4050	4050	4050
170	4475	4475	4475

TEST PERFORMED BY:STEPHEN CIRECO

OUTPUT MEASURED BY LOADCELLSERIAL NUMBER D WITH STRAIN INDICATOR P3
SERIAL NUMBER 158559

W. B. EQUIPMENT SERVICE CO. INC
127 OAK STREET
WOODRIDGE, NJ 07075
201 438 7800

PRESSURE VS FORCE

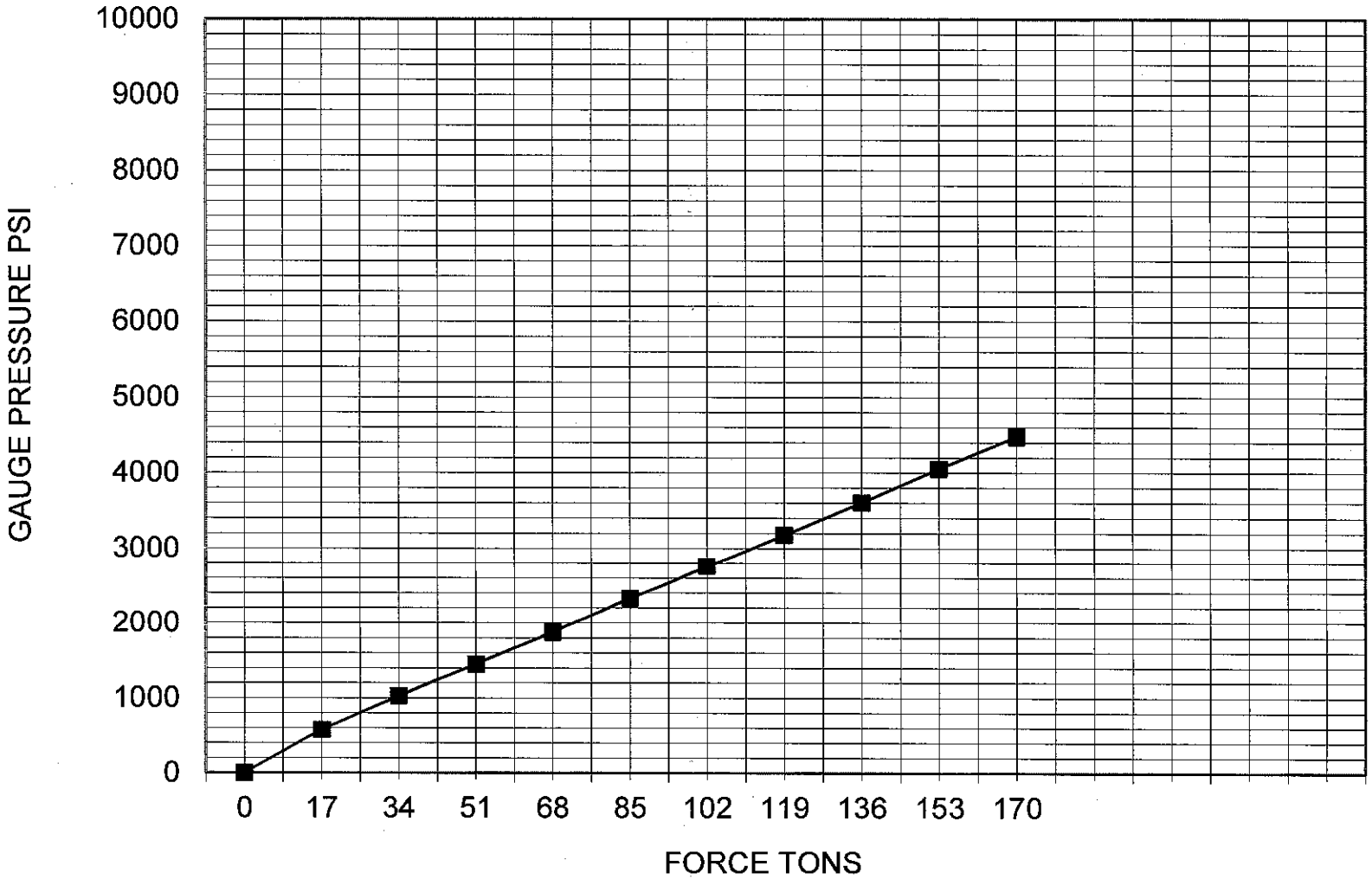

TEST PERFORMED BY: STEPHEN CIRECO
OUTPUT MEASURED BY LOADCELL SERIAL NUMBER D WITH STRAIN INDICATOR P3 SERIAL NUMBER 158559

W. B. EQUIPMENT SERVICE CO. INC.
127 OAK STREET
WOOD RIDGE, NJ 07075
TEL: 201-438-7800 FAX: 201-438-7830

GAUGE CERTIFICATION

W. B. EQUIPMENT SERVICE CO NO:_____ DATE:7/7/15

CUSTOMER: POSILLICO DRILLING

ORDER NO: _____

GAUGE SERIAL NO:	CAPACITY	
WB 2136	10000	PSI
_____	6 INCH	DIAL

WE CERTIFY THAT THE HYDRAULIC GAUGES LISTED ABOVE HAVE BEEN TESTED PRIOR TO SHIPMENT AND FOUND TO BE WITHIN STANDARD COMMERCIAL ACCURACY OF 2% PLUS-OR-MINUS OF FULL SCALE.

VERY TRULY YOURS,
W. B. EQUIPMENT SERVICE CO. INC.

STEPHEN CIRECO

GEOKON 48 Spencer St. Lebanon, NH 03766 USA

Sister Bar Calibration Report

Model Number: 4911-4

Date of Calibration: April 29, 2015

This calibration has been verified/validated as of 06/22/2015

Serial Number: 1512371

Cable Length: 65 feet

Prestress: 35,000 psi

Regression Zero: 7140

Temperature: 22.6 °C

Technician:

Calibration Instruction: CI-VW Rebar

Applied Load (pounds)	Readings				Linearity % Max. Load
	Cycle #1	Cycle #2	Average	Change	
100	7195	7195	7195		
1500	7849	7849	7849	654	-0.22
3000	8566	8566	8566	717	-0.16
4500	9288	9286	9287	721	0.04
6000	10006	10003	10005	718	0.11
100	7195	7193	7194		

For conversion factor, load to strain, refer to table C-2 of the Installation Manual

Gage Factor: 0.352 microstrain/ digit (GK-401 Pos. "B")

Calculated Strain = Gage Factor(Current Reading - Zero Reading)

Note: The above calibration uses the linear regression method.

<u>Users are advised to establish their own zero conditions.</u>

Linearity: ((Calculated Load - Applied Load)/Max. Applied Load) X 100 percent

The above instrument was found to be in tolerance in all operating ranges.
The above named instrument has been calibrated by comparison with standards traceable to the NIST, in compliance with ANSI Z540-1.

GEOKON 48 Spencer St. Lebanon, NH 03766 USA

Sister Bar Calibration Report

Model Number: 4911-4

Date of Calibration: April 29, 2015

This calibration has been verified/validated as of 06/22/2015

Serial Number: 1512370

Cable Length: 65 feet

Prestress: 35,000 psi

Regression Zero: 6877

Temperature: 22.6 °C

Technician:

Calibration Instruction: CI-VW Rebar

Applied Load (pounds)	Readings				Linearity % Max. Load
	Cycle #1	Cycle #2	Average	Change	
100	6935	6933	6934		
1500	7605	7601	7603	669	-0.25
3000	8340	8336	8338	735	-0.20
4500	9083	9080	9082	744	0.15
6000	9814	9811	9813	731	0.06
100	6933	6932	6933		

For conversion factor, load to strain, refer to table C-2 of the Installation Manual

Gage Factor: 0.346 microstrain/ digit (GK-401 Pos. "B")

Calculated Strain = Gage Factor(Current Reading - Zero Reading)

Note: The above calibration uses the linear regression method.

<u>Users are advised to establish their own zero conditions.</u>

Linearity: ((Calculated Load - Applied Load)/Max. Applied Load) X 100 percent

The above instrument was found to be in tolerance in all operating ranges.
The above named instrument has been calibrated by comparison with standards traceable to the NIST, in compliance with ANSI Z540-1.

48 Spencer St. Lebanon, NH 03766 USA

Sister Bar Calibration Report

Model Number: 4911-4

Date of Calibration: April 29, 2015

This calibration has been verified/validated as of 06/22/2015

Serial Number: 1512422

Cable Length: 20 feet

Prestress: 35,000 psi

Regression Zero: 6642

Temperature: 23.1 °C

Technician:

Calibration Instruction: CI-VW Rebar

Applied Load (pounds)	Readings				Linearity % Max. Load
	Cycle #1	Cycle #2	Average	Change	
100	6691	6690	6691		
1500	7372	7372	7372	681	-0.04
3000	8103	8099	8101	729	-0.12
4500	8850	8839	8845	744	0.30
6000	9563	9560	9562	717	-0.18
100	6690	6686	6688		

For conversion factor, load to strain, refer to table C-2 of the Installation Manual

Gage Factor: 0.346 microstrain/ digit (GK-401 Pos. "B")

Calculated Strain = Gage Factor(Current Reading - Zero Reading)

Note: The above calibration uses the linear regression method.

<u>Users are advised to establish their own zero conditions.</u>

Linearity: ((Calculated Load - Applied Load)/Max. Applied Load) X 100 percent

The above instrument was found to be in tolerance in all operating ranges.
The above named instrument has been calibrated by comparison with standards traceable to the NIST, in compliance with ANSI Z540-1.

48 Spencer St. Lebanon, NH 03766 USA

Sister Bar Calibration Report

Model Number: 4911-4

Date of Calibration: April 29, 2015

This calibration has been verified/validated as of 06/22/2015

Serial Number: 1512389

Cable Length: 20 feet

Prestress: 35,000 psi

Regression Zero: 6918

Temperature: 22.6 °C

Technician:

Calibration Instruction: CI-VW Rebar

Applied Load (pounds)	Readings				Linearity % Max. Load
	Cycle #1	Cycle #2	Average	Change	
100	6969	6965	6967		
1500	7632	7630	7631	664	-0.06
3000	8352	8349	8351	720	0.10
4500	9061	9057	9059	708	-0.12
6000	9781	9778	9780	721	0.07
100	6966	6965	6966		

For conversion factor, load to strain, refer to table C-2 of the Installation Manual

Gage Factor: 0.352 microstrain/ digit (GK-401 Pos. "B")

Calculated Strain = Gage Factor(Current Reading - Zero Reading)

Note: The above calibration uses the linear regression method.

Users are advised to establish their own zero conditions.

Linearity: ((Calculated Load - Applied Load)/Max. Applied Load) X 100 percent

The above instrument was found to be in tolerance in all operating ranges.
The above named instrument has been calibrated by comparison with standards traceable to the NIST, in compliance with ANSI Z540-1.

48 Spencer St. Lebanon, NH 03766 USA

Sister Bar Calibration Report

Model Number: 4911-4

Date of Calibration: April 29, 2015

This calibration has been verified/validated as of 06/22/2015

Serial Number: 1512380

Cable Length: 30 feet

Prestress: 35,000 psi

Regression Zero: 7106

Temperature: 22.6 °C

Technician:

Calibration Instruction: CI-VW Rebar

Applied Load (pounds)	Readings				Linearity % Max. Load
	Cycle #1	Cycle #2	Average	Change	
100	7165	7159	7162		
1500	7828	7824	7826	664	-0.23
3000	8558	8552	8555	729	-0.15
4500	9289	9284	9287	732	0.01
6000	10019	10014	10017	730	0.13
100	7160	7156	7158		

For conversion factor, load to strain, refer to table C-2 of the Installation Manual

Gage Factor: 0.348 microstrain/ digit (GK-401 Pos. "B")

Calculated Strain = Gage Factor(Current Reading - Zero Reading)

Note: The above calibration uses the linear regression method.

Users are advised to establish their own zero conditions.

Linearity: ((Calculated Load - Applied Load)/Max. Applied Load) X 100 percent

The above instrument was found to be in tolerance in all operating ranges.
The above named instrument has been calibrated by comparison with standards traceable to the NIST, in compliance with ANSI Z540-1.

48 Spencer St. Lebanon, NH 03766 USA

Sister Bar Calibration Report

Model Number: 4911-4

Date of Calibration: April 29, 2015

This calibration has been verified/validated as of 06/22/2015

Serial Number: 1512379

Cable Length: 30 feet

Prestress: 35,000 psi

Regression Zero: 6858

Temperature: 22.6 °C

Technician:

Calibration Instruction: CI-VW Rebar

Applied Load (pounds)	Readings				Linearity % Max. Load
	Cycle #1	Cycle #2	Average	Change	
100	6918	6913	6916		
1500	7591	7586	7589	673	-0.31
3000	8336	8330	8333	744	-0.15
4500	9080	9075	9078	745	0.01
6000	9824	9816	9820	742	0.10
100	6914	6913	6914		

For conversion factor, load to strain, refer to table C-2 of the Installation Manual

Gage Factor: 0.343 microstrain/ digit (GK-401 Pos. "B")

Calculated Strain = Gage Factor(Current Reading - Zero Reading)

Note: The above calibration uses the linear regression method.

<u>Users are advised to establish their own zero conditions.</u>

Linearity: ((Calculated Load - Applied Load)/Max. Applied Load) X 100 percent

The above instrument was found to be in tolerance in all operating ranges.
The above named instrument has been calibrated by comparison with standards traceable to the NIST, in compliance with ANSI Z540-1.

GEOKON 48 Spencer St. Lebanon, NH 03766 USA

Sister Bar Calibration Report

Model Number: 4911-4

Date of Calibration: April 27, 2015

This calibration has been verified/validated as of 06/22/2015

Serial Number: 1511625

Cable Length: 80 feet

Prestress: 35,000 psi

Regression Zero: 7059

Temperature: 23.3 °C

Technician:

Calibration Instruction: CI-VW Rebar

Applied Load (pounds)	Readings				Linearity % Max. Load
	Cycle #1	Cycle #2	Average	Change	
100	7115	7116	7116		
1500	7783	7788	7786	670	-0.32
3000	8524	8529	8527	741	-0.15
4500	9266	9283	9275	748	0.27
6000	10000	10002	10001	726	-0.05
100	7116	7114	7115		

For conversion factor, load to strain, refer to table C-2 of the Installation Manual

Gage Factor: 0.345 microstrain/ digit (GK-401 Pos. "B")

Calculated Strain = Gage Factor(Current Reading - Zero Reading)

Note: The above calibration uses the linear regression method.

Users are advised to establish their own zero conditions.

Linearity: ((Calculated Load - Applied Load)/Max. Applied Load) X 100 percent

The above instrument was found to be in tolerance in all operating ranges.
The above named instrument has been calibrated by comparison with standards traceable to the NIST, in compliance with ANSI Z540-1.

48 Spencer St. Lebanon, NH 03766 USA

Sister Bar Calibration Report

Model Number: 4911-4

Date of Calibration: April 29, 2015

This calibration has been verified/validated as of 06/22/2015

Serial Number: 1512359

Cable Length: 80 feet

Prestress: 35,000 psi

Regression Zero: 7188

Temperature: 22.6 °C

Technician:

Calibration Instruction: CI-VW Rebar

Applied Load (pounds)	Readings				Linearity % Max. Load
	Cycle #1	Cycle #2	Average	Change	
100	7243	7243	7243		
1500	7895	7896	7896	653	-0.27
3000	8612	8613	8613	717	-0.21
4500	9336	9338	9337	724	0.11
6000	10049	10052	10051	714	0.05
100	7243	7244	7244		

For conversion factor, load to strain, refer to table C-2 of the Installation Manual

Gage Factor: 0.352 microstrain/ digit (GK-401 Pos. "B")

Calculated Strain = Gage Factor(Current Reading - Zero Reading)

Note: The above calibration uses the linear regression method.

<u>Users are advised to establish their own zero conditions.</u>

Linearity: ((Calculated Load - Applied Load)/Max. Applied Load) X 100 percent

The above instrument was found to be in tolerance in all operating ranges.
The above named instrument has been calibrated by comparison with standards traceable to the NIST, in compliance with ANSI Z540-1.

48 Spencer St. Lebanon, NH 03766 USA

Sister Bar Calibration Report

Model Number: 4911-4

Date of Calibration: April 27, 2015

This calibration has been verified/validated as of 06/22/2015

Serial Number: 1511611

Cable Length: 90 feet

Prestress: 35,000 psi

Regression Zero: 6935

Temperature: 23.3 °C

Technician:

Calibration Instruction: CI-VW Rebar

Applied Load (pounds)	Readings				Linearity % Max. Load
	Cycle #1	Cycle #2	Average	Change	
100	6987	6987	6987		
1500	7666	7666	7666	679	-0.19
3000	8402	8410	8406	740	-0.07
4500	9156	9147	9152	746	0.24
6000	9877	9878	9878	726	-0.12
100	6987	6987	6987		

For conversion factor, load to strain, refer to table C-2 of the Installation Manual

Gage Factor: 0.345 microstrain/ digit (GK-401 Pos. "B")

Calculated Strain = Gage Factor(Current Reading - Zero Reading)

Note: The above calibration uses the linear regression method.

<u>Users are advised to establish their own zero conditions.</u>

Linearity: ((Calculated Load - Applied Load)/Max. Applied Load) X 100 percent

The above instrument was found to be in tolerance in all operating ranges.
The above named instrument has been calibrated by comparison with standards traceable to the NIST, in compliance with ANSI Z540-1.

48 Spencer St. Lebanon, NH 03766 USA

Sister Bar Calibration Report

Model Number: 4911-4

Date of Calibration: April 27, 2015

This calibration has been verified/validated as of 06/22/2015

Serial Number: 1511618

Cable Length: 90 feet

Prestress: 35,000 psi

Regression Zero: 7041

Temperature: 23.3 °C

Technician:

Calibration Instruction: CI-VW Rebar

Applied Load (pounds)	Readings				Linearity % Max. Load
	Cycle #1	Cycle #2	Average	Change	
100	7098	7095	7097		
1500	7780	7780	7780	683	-0.22
3000	8530	8525	8528	748	-0.15
4500	9285	9281	9283	755	0.18
6000	10023	10022	10023	740	-0.02
100	7096	7096	7096		

For conversion factor, load to strain, refer to table C-2 of the Installation Manual

Gage Factor: 0.342 microstrain/ digit (GK-401 Pos. "B")

Calculated Strain = Gage Factor(Current Reading - Zero Reading)

Note: The above calibration uses the linear regression method.

<u>Users are advised to establish their own zero conditions.</u>

Linearity: ((Calculated Load - Applied Load)/Max. Applied Load) X 100 percent

The above instrument was found to be in tolerance in all operating ranges.
The above named instrument has been calibrated by comparison with standards traceable to the NIST, in compliance with ANSI Z540-1.

Proactive by Design

APPENDIX F

COMPRESSION LOAD TEST RESULTS

GZA GeoEnvironmental of New York
104 West 29th Street, New York, NY 10001

COMPRESSION PILE LOAD TEST DATA

PROJECT: Draper Hall
LOCATION: New York, New York
OWNER: Metropolitan Hospital
PILING CONTRACTOR: Posillico

Load Test No. Test Pile #1
Pile No. TP-1
Proj. Manager. Alireza Ayobian
Field Engineer Benjamin Cote

Pile Size: 14-inch OD x 77 ft long
Allowable Load: 85 tons
Jack #: WB-1808
Gauge #: WB-2121

Strain Gauge	SN 1512422	SN 1512379	SN 1512371	SN 1511625	SN 1511618
Calibration Factors	G (µ/d) 0.346	G (µ/d) 0.343	G (µ/d) 0.352	G (µ/d) 0.345	G (µ/d) 0.342
Initial Reading	R1 6694	R1 7087	R1 7799	R1 7368	R1 6211
Depth (ft-bgs)	2	40	60	70	77

Job#: 41.0162028.20
Date Start: 7/21/2015
Date End: 7/24/2015

% DL	ACT. TIME (Min.)	HOLD TIME (Min.)	PLANNED LOAD (Tons)	JACK GAUGE PRESSURE (psi)	ACTUAL LOAD (tons)	TEST PILE DISPLACEMENT READINGS: DIAL GAUGE 1 READ (in)	DIAL GAUGE 2 READ (in)	DIAL GAUGE 3 READ (in)	DIAL GAUGE 4 READ (in)	AVG READ (in.)	AVG DISP (in.)	Wire Mirror #1 Read (in.)	Wire Mirror #1 Displ (in.)	STRAIN GAUGE READINGS: STRAIN GAUGE 1 READ (digits)	STRAIN GAUGE 1 (delta micstrain)	STRAIN GAUGE 2 READ (digits)	STRAIN GAUGE 2 (delta micstrain)	STRAIN GAUGE 3 READ (digits)	STRAIN GAUGE 3 (delta micstrain)	STRAIN GAUGE 4 READ (digits)	STRAIN GAUGE 4 (delta micstrain)	STRAIN GAUGE 5 READ (digits)	STRAIN GAUGE 5 (delta micstrain)	REACTION PILE ELEVATION READINGS: Reaction Pile #1 Read (in)	Reaction Pile #1 Disp (in)	Reaction Pile #2 Read (in)	Reaction Pile #2 Disp (in)	Reaction Pile #3 Read (in)	Reaction Pile #3 Disp (in)	Reaction Pile #4 Read (in)	Reaction Pile #4 Disp (in)	COMMENTS
0	9:57	0.0	0	0	0.0	3.000	3.000	3.000	3.000	3.000	0.000	3.5000	0.0000	6694	0	7087	0	7799	0	7368	0	6211	0	3.97	0.00	3.00	0.00	3.09	0.00	3.13	0.00	
26		0.5	22	700	21.7	2.944	2.957	2.942	2.928	2.943	0.057	3.4688	0.0313																			
26		1.0	22	700	21.7	2.944	2.957	2.941	2.927	2.942	0.058																					
26		2.0	22	700	21.7	2.943	2.956	2.941	2.927	2.942	0.058			6306	134	6858	79	7705	33	7328	14	6204	2									
26		4.0	22	700	21.7	2.942	2.954	2.940	2.927	2.941	0.059	3.4688	0.0313																			
26	10:05	8.0	22	700	21.7	2.941	2.954	2.940	2.926	2.940	0.060	3.4688	0.0313																			
26	10:12	15.0	22	700	21.7	2.940	2.953	2.939	2.925	2.939	0.061	3.4688	0.0313	6313	132	6856	79	7700	35	7327	14	6203	3									
26	10:27	30.0	22	700	21.7	2.940	2.952	2.939	2.925	2.939	0.061	3.4688	0.0313																			
26	10:42	45.0	22	700	21.7	2.939	2.952	2.938	2.925	2.939	0.061	3.4688	0.0313	6318	130	6853	80	7695	37	7323	16	6201	3	3.31	-0.66	3.63	0.63	3.38	0.28	3.56	0.44	
26	10:57	60.0	22	700	21.7	2.939	2.952	2.938	2.925	2.939	0.061	3.4688	0.0313																			
51		0.5	43	1250	43.0	2.889	2.900	2.877	2.864	2.883	0.118	3.4063	0.0938																			
51		1.0	43	1250	43.0	2.897	2.899	2.867	2.863	2.882	0.119	3.4063	0.0938																			
51		2.0	43	1250	43.0	2.887	2.898	2.875	2.862	2.881	0.120	3.4063	0.0938																			
51		4.0	43	1250	43.0	2.886	2.897	2.875	2.861	2.880	0.120	3.4063	0.0938	6028	231	6650	150	7554	86	7251	40	6184	9									
51		8.0	43	1250	43.0	2.885	2.896	2.874	2.860	2.879	0.121	3.4063	0.0938																			
51	11:14	15.0	43	1250	43.0	2.884	2.895	2.873	2.860	2.878	0.122													3.31	-0.66	3.69	0.69	3.44	0.34	3.56	0.44	
51	11:29	30.0	43	1250	43.0	2.882	2.894	2.871	2.868	2.879	0.121																					
51	11:44	45.0	43	1250	43.0	2.882	2.893	2.870	2.857	2.876	0.125	3.4063	0.0938	6043	225	6648	151	7542	91	7244	43	6182	10	3.31	-0.66	3.69	0.69	3.44	0.34	3.56	0.44	
51	11:59	60.0	43	1250	43.0	2.881	2.892	2.870	2.857	2.875	0.125																					
75		0.5	64	1800	65.0	2.806	2.816	2.786	2.771	2.795	0.205																					
75		1.0	64	1800	65.0	2.804	2.815	2.784	2.770	2.793	0.207																					
75		2.0	64	1800	65.0	2.803	2.814	2.784	2.769	2.793	0.208																					
75		4.0	64	1800	65.0	2.802	2.813	2.783	2.769	2.792	0.208	3.3281	0.1719	5676	352	6374	245	7325	167	7124	84	6154	20	3.38	-0.59	3.75	0.75	3.44	0.34	3.56	0.44	
75		8.0	64	1800	65.0	2.801	2.812	2.782	2.768	2.791	0.209																					
75	12:17	15.0	64	1800	65.0	2.799	2.810	2.780	2.766	2.789	0.211	3.3281	0.1719																			
75	12:32	30.0	64	1800	65.0	2.797	2.808	2.779	2.765	2.787	0.213																					
75	12:47	45.0	64	1800	65.0	2.796	2.807	2.778	2.763	2.786	0.214																					
75	13:02	60.0	64	1800	65.0	2.795	2.806	2.777	2.762	2.785	0.215																					
100		0.5	85	2350	86.0	2.728	2.739	2.702	2.683	2.713	0.287																					
100		1.0	85	2350	86.0	2.724	2.735	2.699	2.682	2.710	0.290																					
100		2.0	85	2350	86.0	2.723	2.735	2.698	2.680	2.709	0.291													3.41	-0.56	3.75	0.75	3.50	0.41	3.59	0.47	
100		4.0	85	2350	86.0	2.721	2.734	2.696	2.679	2.708	0.293	3.2500	0.2500	5499	414	6130	328	7125	237	7012	123	6129	28									
100		8.0	85	2350	86.0	2.720	2.732	2.695	2.677	2.706	0.294																					
100	13:20	15.0	85	2350	86.0	2.718	2.731	2.693	2.675	2.704	0.296																					
100	13:35	30.0	85	2350	86.0	2.715	2.727	2.691	2.672	2.701	0.299																					
100	13:50	45.0	85	2350	86.0	2.714	2.726	2.690	2.671	2.700	0.300	3.2344	0.2656	5529	403	6129	329	7113	241	7004	126	6128	28	3.47	-0.50	3.75	0.75	3.53	0.44	3.59	0.47	raised pressure from 2250 to 2350
100	14:05	60.0	85	2350	86.0	2.713	2.720	2.681	2.663	2.694	0.306																					
100	14:20	75.0	85	2350	86.0	2.706	2.719	2.680	2.662	2.692	0.308	3.2188	0.2813	5488	417	6094	341	7091	249	6991	130	6125	29	3.47	-0.50	3.75	0.75	3.53	0.44	3.63	0.50	
100	14:35	90.0	85	2350	86.0	2.705	2.718	2.679	2.661	2.691	0.309																					
125		0.5	106	2850	106.0	2.632	2.645	2.600	2.581	2.615	0.386																					
125		1.0	106	2850	106.0	2.630	2.643	2.598	2.579	2.613	0.388																					
125		2.0	106	2850	106.0	2.627	2.640	2.596	2.577	2.610	0.390																					
125		4.0	106	2850	106.0	2.626	2.638	2.595	2.576	2.609	0.391	3.1250	0.3750	5294	484	5834	430	6911	312	6892	164	6111	34	3.47	-0.50	3.81	0.81	3.53	0.44	3.63	0.50	
125		8.0	106	2850	106.0	2.623	2.636	2.592	2.573	2.606	0.394																					

GZA GeoEnvironmental of New York
104 West 29th Street, New York, NY 10001

COMPRESSION PILE LOAD TEST DATA

PROJECT: Draper Hall
LOCATION: New York, New York
OWNER: Metropolitan Hospital
PILING CONTRACTOR: Posillico

Load Test No. Test Pile #1
Pile No. TP-1
Proj. Manager. Alireza Ayobian
Field Engineer Benjamin Cote

Pile Size: 14-inch OD x 77 ft long
Allowable Load: 85 tons
Jack #: WB-1808
Gauge #: WB-2121

Strain Gauge	SN 1512422	SN 1512379	SN 1512371	SN 1511625	SN 1511618
Calibration Factors	G (µ/d) 0.346	G (µ/d) 0.343	G (µ/d) 0.352	G (µ/d) 0.345	G (µ/d) 0.342
Initial Reading	R1 6694	R1 7087	R1 7799	R1 7368	R1 6211
Depth (ft-bgs)	2	40	60	70	77

Job#: 41.0162028.20
Date Start: 7/21/2015
Date End: 7/24/2015

% DL	ACT. TIME (Min.)	HOLD TIME (Min.)	PLANNED LOAD (Tons)	JACK GAUGE PRESSURE (psi)	ACTUAL LOAD (tons)	TEST PILE DISPLACEMENT READINGS: DIAL GAUGE 1 READ (in)	DIAL GAUGE 2 READ (in)	DIAL GAUGE 3 READ (in)	DIAL GAUGE 4 READ (in)	AVG READ (in.)	AVG DISP (in.)	Wire Mirror #1 Read (in.)	Wire Mirror #1 Displ (in.)	STRAIN GAUGE READINGS: STRAIN GAUGE 1 READ (digits)	STRAIN GAUGE 1 (delta micstrain)	STRAIN GAUGE 2 READ (digits)	STRAIN GAUGE 2 (delta micstrain)	STRAIN GAUGE 3 READ (digits)	STRAIN GAUGE 3 (delta micstrain)	STRAIN GAUGE 4 READ (digits)	STRAIN GAUGE 4 (delta micstrain)	STRAIN GAUGE 5 READ (digits)	STRAIN GAUGE 5 (delta micstrain)	REACTION PILE ELEVATION READINGS: Reaction Pile #1 Read (in)	Reaction Pile #1 Disp (in)	Reaction Pile #2 Read (in)	Reaction Pile #2 Disp (in)	Reaction Pile #3 Read (in)	Reaction Pile #3 Disp (in)	Reaction Pile #4 Read (in)	Reaction Pile #4 Disp (in)	COMMENTS
125	14:52	15.0	106	2850	106.0	2.621	2.634	2.590	2.571	2.604	0.396																					
125	15:07	30.0	106	2850	106.0	2.618	2.632	2.587	2.568	2.601	0.399																					
125	15:22	45.0	106	2850	106.0	2.616	2.629	2.585	2.566	2.599	0.401	3.1250	0.3750	5339	469	5838	429	6900	317	6886	166	6112	34	3.47	-0.50	3.81	0.81	3.56	0.47	3.63	0.50	
125	15:37	60.0	106	2850	106.0	2.615	2.628	2.584	2.565	2.598	0.402																					pressure dropped to 2800 psi
125	15:52	75.0	106	2850	106.0	2.614	2.627	2.583	2.564	2.597	0.403																					
151		0.5	128	3400	127.0	2.525	2.538	2.486	2.467	2.504	0.496																					
151		1.0	128	3400	127.0	2.524	2.536	2.484	2.465	2.502	0.498																					
151		2.0	128	3400	127.0	2.521	2.534	2.483	2.464	2.501	0.500																					
151		4.0	128	3400	127.0	2.519	2.531	2.480	2.471	2.500	0.500	3.0156	0.4844	5097	553	5524	536	6710	383	6778	203	6099	38	3.50	-0.47	3.81	0.81	3.56	0.47	3.63	0.50	
151		8.0	128	3400	127.0	2.516	2.528	2.477	2.459	2.495	0.505																					
151	16:09	15.0	128	3400	127.0	2.512	2.525	2.474	2.455	2.492	0.509																					
151	16:24	30.0	128	3400	127.0	2.509	2.522	2.471	2.453	2.489	0.511																					
151	16:39	45.0	128	3400	127.0	2.507	2.521	2.469	2.450	2.487	0.513	3.0156	0.4844	5148	535	5532	533	6700	387	6771	206	6099	38	3.50	-0.47	3.88	0.88	3.56	0.47	3.63	0.50	
151	16:54	60.0	128	3400	127.0	2.506	2.520	2.468	2.449	2.486	0.514																					
151	17:09	75.0	128	3400	127.0	2.506	2.520	2.468	2.449	2.486	0.514																					
151	17:24	90.0	128	3400	127.0	2.503	2.517	2.466	2.477	2.491	0.509																					
151	17:39	105.0	128	3400	127.0	2.503	2.517	2.466	2.446	2.483	0.517	3.0156	0.4844	5162	530	5531	534	6697	388	6769	207	6099	38	3.50	-0.47	3.88	0.88	3.56	0.47	3.63	0.50	
151	17:54	120.0	128	3400	127.0	2.486	2.500	2.448	2.428	2.466	0.535																					* increase pressure to 3400
175		0.5	149	3950	149.3	2.403	2.415	2.357	2.336	2.378	0.622																					
175		1.0	149	3950	149.3	2.399	2.412	2.354	2.334	2.375	0.625	2.8906	0.6094	4881	627	5202	647	6567	434	6660	244	6088	42									
175		2.0	149	3950	149.3	2.396	2.410	2.352	2.332	2.373	0.628																					
175		4.0	149	3950	149.3	2.394	2.407	2.350	2.330	2.370	0.630																					
175		8.0	149	3950	149.3	2.390	2.404	2.346	2.325	2.366	0.634																					
175	18:13	15.0	149	3950	149.3	2.388	2.401	2.344	2.323	2.364	0.636	2.8906	0.6094																			
175		30.0	149	3950	149.3	2.385	2.398	2.341	2.320	2.361	0.639	2.8906	0.6094											3.50	-0.47	3.88	0.88	3.56	0.47	3.69	0.56	increased from 3800 to 3950 psi
175		45.0	149	3950	149.3	2.371	2.384	2.327	2.305	2.347	0.653																					
175		60.0	149	3950	149.3	2.366	2.379	2.322	2.301	2.342	0.658																					
175		75.0	149	3950	149.3	2.365	2.378	2.321	2.300	2.341	0.659																					
175		90.0	149	3950	149.3	2.363	2.377	2.320	2.298	2.340	0.661	2.8594	0.6406	4913	616	5158	662	6539	444	6636	253	6086	43	3.50	-0.47	3.94	0.94	3.56	0.47	3.69	0.56	
175		105.0	149	3950	149.3	2.355	2.370	2.312	2.289	2.332	0.669																					
175		120.0	149	3950	149.3	2.353	2.367	2.310	2.297	2.332	0.668																					
200	20:00	0.5	170	4500	170.0	2.272	2.285	2.221	2.193	2.243	0.757																					
200		1.0	170	4500	170.0	2.268	2.282	2.218	2.195	2.241	0.759																					
200		2.0	170	4400	170.0	2.265	2.279	2.216	2.193	2.238	0.762																					
200		4.0	170	4500	170.0	2.246	2.261	2.196	2.174	2.219	0.781																					increase from 4400 to 4500 psi
200		8.0	170	4500	170.0	2.241	2.256	2.191	2.168	2.214	0.786	2.7500	0.7500	4653	706	4862	763	6369	503	6521	292	6074	47									
200		15.0	170	4500	170.0	2.235	2.250	2.186	2.164	2.209	0.791																					
200		30.0	170	4500	170.0	2.220	2.235	2.170	2.147	2.193	0.807																					increase from 4400 to 4500 psi
200		45.0	170	4500	170.0	2.206	2.221	2.156	2.133	2.179	0.821																					increase from 4400 to 4500 psi
200	21:00	60.0	170	4500	170.0	2.201	2.216	2.151	2.128	2.174	0.826	2.7031	0.7969	4645	709	4704	817	6334	516	6494	302	6069	49	3.56	-0.41	4.00	1.00	3.56	0.47	3.69	0.56	
200	22:00	120.0	170	4500	170.0	2.187	2.201	2.137	2.114	2.160	0.840																					
200	23:00	180.0	170	4500	170.0	2.187	2.192	2.129	2.105	2.153	0.847																					
200	24:00	240.0	170	4500	170.0	2.174	2.191	2.127	2.104	2.149	0.851																					
200	1:00	300.0	170	4500	170.0	2.168	2.184	2.120	2.096	2.142	0.858			4638	711	4663	831	6310	524	6481	306	6065	50									increase from 4400 to 4500

GZA GeoEnvironmental of New York
104 West 29th Street, New York, NY 10001

COMPRESSION PILE LOAD TEST DATA

PROJECT: Draper Hall
LOCATION: New York, New York
OWNER: Metropolitan Hospital
PILING CONTRACTOR: Posillico

Load Test No. Test Pile #1
Pile No. TP-1
Proj. Manager. Alireza Ayobian
Field Engineer Benjamin Cote

Pile Size: 14-inch OD x 77 ft long
Allowable Load: 85 tons
Jack #: WB-1808
Gauge #: WB-2121

Strain Gauge	SN 1512422	SN 1512379	SN 1512371	SN 1511625	SN 1511618
Calibration Factors	G (µ/d) 0.346	G (µ/d) 0.343	G (µ/d) 0.352	G (µ/d) 0.345	G (µ/d) 0.342
Initial Reading	R1 6694	R1 7087	R1 7799	R1 7368	R1 6211
Depth (ft-bgs)	2	40	60	70	77

Job#: 41.0162028.20
Date Start: 7/21/2015
Date End: 7/24/2015

% DL	ACT. TIME (Min.)	HOLD TIME (Min.)	PLANNED LOAD (Tons)	JACK GAUGE PRESSURE (psi)	ACTUAL LOAD (tons)	TEST PILE DISPLACEMENT READINGS: DIAL GAUGE 1 READ (in)	DIAL GAUGE 2 READ (in)	DIAL GAUGE 3 READ (in)	DIAL GAUGE 4 READ (in)	AVG READ (in.)	AVG DISP (in.)	Wire Mirror #1 Read (in.)	Wire Mirror #1 Displ (in.)	STRAIN GAUGE READINGS: STRAIN GAUGE 1 READ (digits)	STRAIN GAUGE 1 (delta micstrain)	STRAIN GAUGE 2 READ (digits)	STRAIN GAUGE 2 (delta micstrain)	STRAIN GAUGE 3 READ (digits)	STRAIN GAUGE 3 (delta micstrain)	STRAIN GAUGE 4 READ (digits)	STRAIN GAUGE 4 (delta micstrain)	STRAIN GAUGE 5 READ (digits)	STRAIN GAUGE 5 (delta micstrain)	REACTION PILE ELEVATION READINGS: Reaction Pile #1 Read (in)	Reaction Pile #1 Disp (in)	Reaction Pile #2 Read (in)	Reaction Pile #2 Disp (in)	Reaction Pile #3 Read (in)	Reaction Pile #3 Disp (in)	Reaction Pile #4 Read (in)	Reaction Pile #4 Disp (in)	COMMENTS
200	2:00	360.0	170	4500	170.0	2.165	2.181	2.117	2.093	2.139	0.861	2.6719	0.8281											3.56	-0.41	4.00	1.00	3.56	0.47	3.69	0.56	
200	3:00	420.0	170	4500	170.0	2.164	2.179	2.115	2.091	2.137	0.863																					
200	4:00	480.0	170	4500	170.0	2.158	2.174	2.109	2.084	2.131	0.869																					
200	5:00	540.0	170	4500	170.0	2.152	2.169	2.104	2.079	2.126	0.874																					
200	6:00	600.0	170	4500	170.0	2.150	2.167	2.103	2.078	2.125	0.876	2.6563	0.8438	4653	706	4664	831	6288	532	6463	312	6058	52	3.56	-0.41	4.00	1.00	3.56	0.47	3.69	0.56	
200	7:00	660.0	170	4500	170.0	2.150	2.166	2.102	2.075	2.123	0.877																					
200	8:00	720.0	170	4500	170.0	2.146	2.163	2.099	2.073	2.120	0.880	2.6563	0.8438	4675	698	4652	835	6288	532	6462	312	6059	52	3.56	-0.41	4.00	1.00	3.56	0.47	3.69	0.56	
200	9:00	780.0	170	4500	170.0	2.141	2.159	2.095	2.069	2.116	0.884																					
200	10:00	840.0	170	4400	170.0	2.141	2.158	2.093	2.068	2.115	0.885	2.6406	0.8594	4699	690	4661	832	6289	531	6464	312	6059	52	3.63	-0.34	4.00	1.00	3.56	0.47	3.69	0.56	increase from 4400 to 4500 psi
200	11:00	900.0	170	4475	170.0	2.133	2.149	2.084	2.060	2.107	0.894	2.6406	0.8594																			
200	12:00	960.0	170	4475	170.0	2.134	2.149	2.085	2.061	2.107	0.893	2.6406	0.8594	4647	708	4633	842	6281	534	6458	314	6058	52	3.63	-0.34	4.00	1.00	3.56	0.47	3.69	0.56	
200	13:00	1020.0	170	4475	170.0	2.131	2.147	2.082	2.057	2.104	0.896																					
200	14:00	1080.0	170	4475	170.0	2.127	2.143	2.079	2.054	2.101	0.899	2.6250	0.8750	4641	710	4626	844	6277	536	6457	314	6052	54	3.63	-0.34	4.00	1.00	3.56	0.47	3.69	0.56	
200	15:00	1140.0	170	4475	170.0	2.126	2.141	2.077	2.053	2.099	0.901																					
200	16:00	1200.0	170	4475	170.0	2.125	2.140	2.075	2.051	2.098	0.902	2.6250	0.8750	4646	709	4626	844	6276	536	6456	315	6056	53	3.63	-0.34	4.00	1.00	3.63	0.53	3.69	0.56	
200	17:00	1260.0	170	4475	170.0	2.123	2.138	2.073	2.050	2.096	0.904																					
200	18:00	1320.0	170	4475	170.0	2.123	2.138	2.073	2.049	2.096	0.904	2.6250	0.8750	4651	707	4626	844	6271	538	6453	316	6055	53									
200	19:00	1380.0	170	4475	170.0	2.122	2.138	2.074	2.048	2.096	0.905	2.6250	0.8750	4650	707	4624	845	6271	538	6452	316	6055	53									
200	20:00	1440.0	170	4475	170.0	2.122	2.138	2.074	2.048	2.096	0.905	2.6250	0.8750	4653	706	4620	846	6268	539	6449	317	6054	54	3.63	-0.34	4.00	1.00	3.56	0.47	3.69	0.56	
151	20:15	0.5	128	3400	127.0	2.173	2.187	2.127	2.103	2.148	0.853																					
151		1.0	128	3400	127.0	2.173	2.188	2.127	2.103	2.148	0.852																					
151		2.0	128	3400	127.0	2.174	2.190	2.129	2.104	2.149	0.851	2.6875	0.8125																			
151		4.0	128	3400	127.0	2.174	2.191	2.129	2.104	2.150	0.851																					
151		8.0	128	3400	127.0	2.174	2.192	2.130	2.105	2.150	0.850			5191	520	4868	761	6310	524	6465	312	6056	53									
151		15.0	128	3400	127.0	2.175	2.191	2.130	2.105	2.150	0.850	2.7031	0.7969	5186	522	4870	760	6311	524	6464	312	6056	53	3.56	-0.41	4.00	1.00	3.50	0.41	3.75	0.63	
151		30.0	128	3400	127.0	2.175	2.190	2.129	2.105	2.150	0.850																					
151		45.0	128	3400	127.0	2.175	2.190	2.129	2.105	2.150	0.850																					
151		60.0	128	3400	127.0	2.175	2.190	2.129	2.105	2.150	0.850	2.688	0.8125	5179	524	4873	759	6311	524	6464	312	6056	53	3.56	-0.41	4.00	1.00	3.50	0.41	3.75	0.63	
100	21:15	0.5	85	2350	86.0	2.253	2.270	2.216	2.191	2.233	0.768																					
100		1.0	85	2350	86.0	2.254	2.270	2.217	2.192	2.233	0.767																					
100		2.0	85	2350	86.0	2.255	2.272	2.218	2.193	2.235	0.766	2.766	0.7344	5848	293	5352	595	6405	491	6501	299	6060	52									
100		4.0	85	2350	86.0	2.256	2.273	2.219	2.193	2.235	0.765																					
100		8.0	85	2350	86.0	2.257	2.274	2.219	2.194	2.236	0.764																					
100		15.0	85	2350	86.0	2.257	2.274	2.220	2.194	2.236	0.764																					
100		30.0	85	2350	86.0	2.258	2.275	2.220	2.195	2.237	0.763																					
100		45.0	85	2350	86.0	2.258	2.275	2.220	2.195	2.237	0.763																					
100		60.0	85	2350	86.0	2.258	2.275	2.220	2.195	2.237	0.763	2.766	0.7344	5830	299	5361	592	6410	489	6503	298	6060	52	3.50	-0.47	3.88	0.88	3.50	0.41	3.63	0.50	
51	22:30	0.5	43	1250	43.0	2.382	2.405	2.361	2.333	2.370	0.630																					
51		1.0	43	1250	43.0	2.383	2.406	2.362	2.333	2.371	0.629																					
51		2.0	43	1250	43.0	2.385	2.407	2.363	2.333	2.372	0.628																					
51		4.0	43	1250	43.0	2.386	2.409	2.364	2.335	2.374	0.627																					
51		8.0	43	1250	43.0	2.387	2.410	2.365	2.335	2.374	0.626																					
51		15.0	43	1250	43.0	2.387	2.411	2.366	2.335	2.375	0.625	2.906	0.5938	6538	54	6052	355	6668	398	6603	264	6076	46	3.44	-0.53	3.81	0.81	3.50	0.41	3.63	0.50	
51		30.0	43	1250	43.0	2.388	2.411	2.367	2.337	2.376	0.624																					

GZA GeoEnvironmental of New York
104 West 29th Street, New York, NY 10001

COMPRESSION PILE LOAD TEST DATA

PROJECT: Draper Hall
LOCATION: New York, New York
OWNER: Metropolitan Hospital
PILING CONTRACTOR: Posillico

Load Test No. Test Pile #1
Pile No. TP-1
Proj. Manager. Alireza Ayobian
Field Engineer Benjamin Cote

Pile Size: 14-inch OD x 77 ft long
Allowable Load: 85 tons
Jack #: WB-1808
Gauge #: WB-2121

Strain Gauge	SN 1512422	SN 1512379	SN 1512371	SN 1511625	SN 1511618
Calibration Factors	G (µ/d) 0.346	G (µ/d) 0.343	G (µ/d) 0.352	G (µ/d) 0.345	G (µ/d) 0.342
Initial Reading	R1 6694	R1 7087	R1 7799	R1 7368	R1 6211
Depth (ft-bgs)	2	40	60	70	77

Job#: 41.0162028.20
Date Start: 7/21/2015
Date End: 7/24/2015

% DL	ACT. TIME (Min.)	HOLD TIME (Min.)	PLANNED LOAD (Tons)	JACK GAUGE PRESSURE (psi)	ACTUAL LOAD (tons)	TEST PILE DISPLACEMENT READINGS								STRAIN GAUGE READINGS										REACTION PILE ELEVATION READINGS								COMMENTS
						DIAL GAGE 1 READ (in)	DIAL GAGE 2 READ (in)	DIAL GAGE 3 READ (in)	DIAL GAGE 4 READ (in)	AVG READ (in.)	AVG DISP (in.)	Wire Mirror #1 Read (in.)	Wire Mirror #1 Displ (in.)	STRAIN GAUGE 1 READ (digits)	STRAIN GAUGE 1 (delta micstrain)	STRAIN GAUGE 2 READ (digits)	STRAIN GAUGE 2 (delta micstrain)	STRAIN GAUGE 3 READ (digits)	STRAIN GAUGE 3 (delta micstrain)	STRAIN GAUGE 4 READ (digits)	STRAIN GAUGE 4 (delta micstrain)	STRAIN GAUGE 5 READ (digits)	STRAIN GAUGE 5 (delta micstrain)	Reaction Pile #1 Read (in)	Reaction Pile #1 Disp (in)	Reaction Pile #2 Read (in)	Reaction Pile #2 Disp (in)	Reaction Pile #3 Read (in)	Reaction Pile #3 Disp (in)	Reaction Pile #4 Read (in)	Reaction Pile #4 Disp (in)	
51		45.0	43	1250	43.0	2.389	2.412	2.367	2.337	2.376	0.624																					
51		60.0	43	1250	43.0	2.389	2.413	2.368	2.338	2.377	0.623	2.906	0.5938	6531	56	6051	355	6672	397	6605	263	6074	47									
0	23:40	0.5	0	0	0.0	2.588	2.645	2.656	2.601	2.623	0.378																					
0		1.0	0	0	0.0	2.591	2.645	2.656	2.605	2.624	0.376																					
0		2.0	0	0	0.0	2.595	2.645	2.655	2.611	2.627	0.374																					
0		4.0	0	0	0.0	2.607	2.644	2.652	2.618	2.630	0.370																					
0		8.0	0	0	0.0	2.612	2.645	2.652	2.620	2.632	0.368																					
0		15.0	0	0	0.0	2.616	2.648	2.654	2.624	2.636	0.365	3.172	0.3281	7380	237	6781	105	7309	172	6950	144	6124	30	3.00	-0.97	3.00	0.00	3.00	-0.09	3.00	-0.13	
0		30.0	0	0	0.0	2.620	2.651	2.657	2.627	2.639	0.361																					
0		45.0	0	0	0.0	2.622	2.653	2.659	2.630	2.641	0.359	3.172	0.3281	7375	236	6788	103	7318	169	6957	142	6124	30	3.00	-0.97	3.00	0.00	3.00	-0.09	3.00	-0.13	
0		60.0	0	0	0.0	2.623	2.653	2.659	2.630	2.641	0.359	3.172	0.3281	7373	235	6789	102	7320	169	6958	141	6125	29	3.00	-0.97	3.00	0.00	3.00	-0.09	3.00	-0.13	
0		1820.0	0	0	0.0	2.641	2.670	2.674	2.645	2.658	0.343	3.188	0.3125	7364	232	6805	97	7349	158	6982	133	6124	30									Final Reading at 7 AM on 7/24

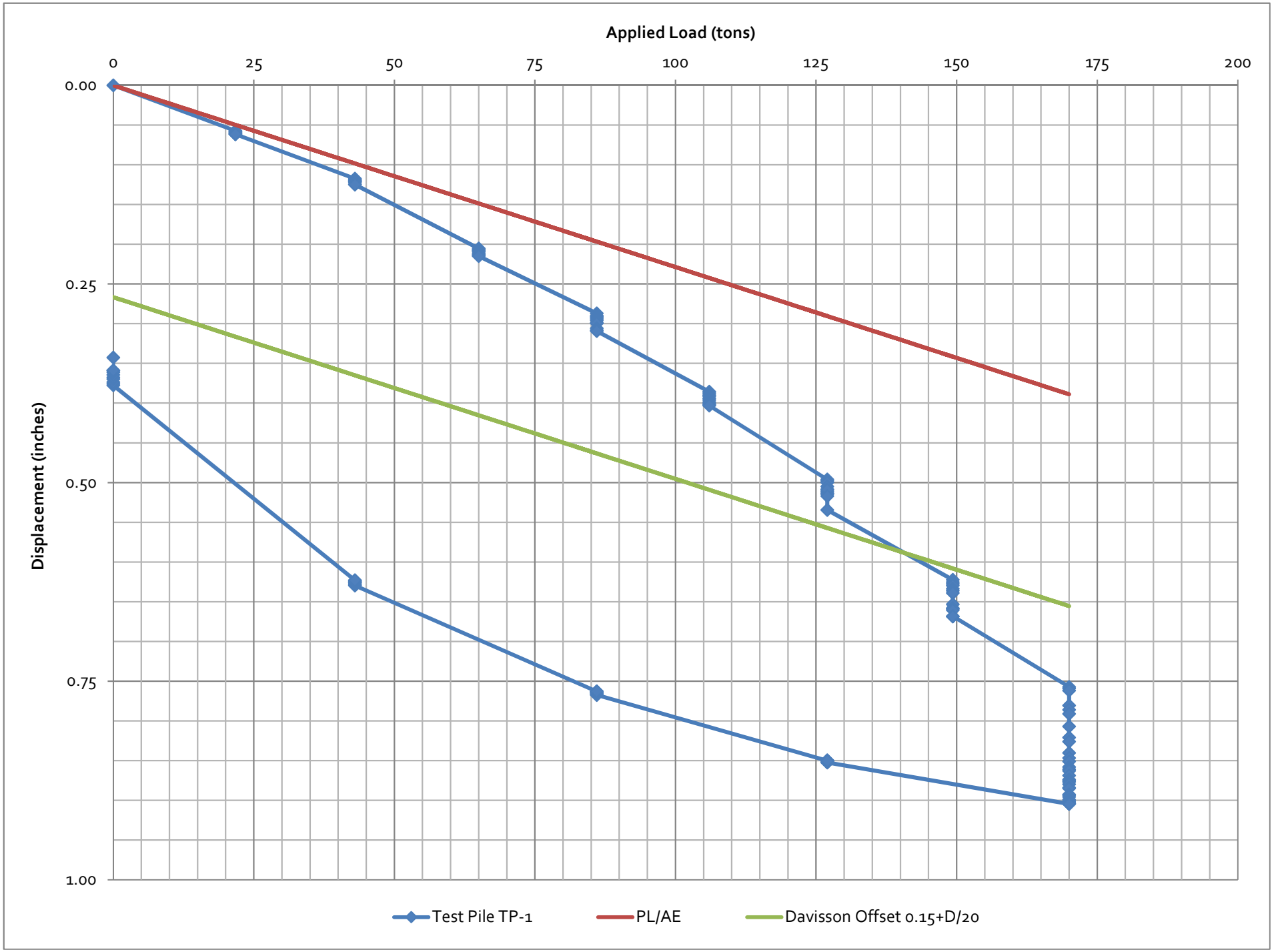
Applied Load (tons)
0
25
50
75
100
125
150
175
200
0.00
0.25
0.50
0.75
1.00
Displacement (inches)
Test Pile TP-1
PL/AE
Davisson Offset 0.15+D/20

GZA GeoEnvironmental of New York
104 West 29th Street, New York, NY 10001

COMPRESSION PILE LOAD TEST DATA

PROJECT: Draper Hall
LOCATION: New York, New York
OWNER: Metropolitan Hospital
PILING CONTRACTOR: Posillico

Load Test No. Test Pile #2
Pile No. TP-2
Proj. Manager. Alireza Ayobian
Field Engineer Benjamin Cote

Pile Size: 14-inch OD x 77 ft long
Allowable Load: 85 tons
Jack #: WB-1811
Gauge #: WB-2136

Strain Gauge	SN 1512389	SN 1512380	SN 1512370	SN 1512359	SN 1511611
Calibration Factors	G (µ/d) 0.352	G (µ/d) 0.348	G (µ/d) 0.346	G (µ/d) 0.352	G (µ/d) 0.345
Initial Reading	R1 6858	R1 7214	R1 7098	R1 7397	R1 7189
Depth (ft-bgs)	2	40	60	70	77

Job#: 41.0162028.20
Date Start: 7/16/2015
Date End: 7/17/2015

% DL	ACT. TIME (Min.)	HOLD TIME (Min.)	PLANNED LOAD (Tons)	JACK GAUGE PRESSURE (psi)	ACTUAL LOAD (tons)	TEST PILE DISPLACEMENT READINGS: DIAL GAUGE 1 READ (in)	DIAL GAUGE 2 READ (in)	DIAL GAUGE 3 READ (in)	DIAL GAUGE 4 READ (in)	AVG READ (in.)	AVG DISP (in.)	Wire Mirror #1 Read (in.)	Wire Mirror #1 Displ (in.)	STRAIN GAUGE READINGS: STRAIN GAUGE 1 READ (digits)	STRAIN GAUGE 1 (delta micstrain)	STRAIN GAUGE 2 READ (digits)	STRAIN GAUGE 2 (delta micstrain)	STRAIN GAUGE 3 READ (digits)	STRAIN GAUGE 3 (delta micstrain)	STRAIN GAUGE 4 READ (digits)	STRAIN GAUGE 4 (delta micstrain)	STRAIN GAUGE 5 READ (digits)	STRAIN GAUGE 5 (delta micstrain)	REACTION PILE ELEVATION READINGS: Reaction Pile #1 Read (in)	Reaction Pile #1 Disp (in)	Reaction Pile #2 Read (in)	Reaction Pile #2 Disp (in)	Reaction Pile #3 Read (in)	Reaction Pile #3 Disp (in)	Reaction Pile #4 Read (in)	Reaction Pile #4 Disp (in)	COMMENTS
0	10:18	0.0	0	0	0.00	3.000	3.000	3.000	3.000	3.000	0.000	4.6563	0.0000											3.00	0.00	3.00	0.00	3.00	0.00	3.00	0.00	
26		0.5	22	750	22.68	2.959	2.940	2.935	2.954	2.947	0.053	4.5938	0.0625																			
26		1.0	22	750	22.68	2.959	2.939	2.935	2.954	2.947	0.053																					
26		2.0	22	750	22.68	2.958	2.939	2.935	2.954	2.947	0.053													3.13	0.13	3.13	0.13	3.13	0.13	3.13	0.13	
26		4.0	22	750	22.68	2.957	2.938	2.935	2.953	2.946	0.054			6619	84	6938	96	7003	33	7359	13	7171	6									
26		8.0	22	750	22.68	2.957	2.938	2.934	2.952	2.945	0.055	4.5625	0.0938																			
26		15.0	22	750	22.68	2.956	2.937	2.933	2.951	2.944	0.056			6619	84	6939	96	7000	34	7358	14	7171	6									
26		30.0	22	750	22.68	2.956	2.937	2.932	2.950	2.944	0.056	4.5625	0.0938																			PSI increased from 700 to 750 psi
26		45.0	22	750	22.68	2.954	2.934	2.929	2.948	2.941	0.059																					
26		60.0	22	750	22.68	2.953	2.933	2.928	2.948	2.941	0.059	4.5000	0.1563	6610	87	6930	99	6969	45	7359	13	7171	6									
51	11:18	0.5	43	1250	42.00	2.914	2.880	2.874	2.907	2.894	0.106	4.5000	0.1563	6387	166	6725	170	6879	76	7286	39	7132	20	3.19	0.19	3.19	0.19	3.19	0.19	3.19	0.19	
51		1.0	43	1250	42.00	2.913	2.879	2.873	2.906	2.893	0.107																					
51		2.0	43	1250	42.00	2.912	2.878	2.872	2.905	2.892	0.108																					
51		4.0	43	1250	42.00	2.912	2.878	2.871	2.905	2.892	0.109																					
51		8.0	43	1250	42.00	2.911	2.877	2.870	2.904	2.891	0.110																					
51		15.0	43	1250	42.00	2.910	2.880	2.875	2.908	2.893	0.107																					Loud noise at 16 minutes
51		30.0	43	1250	42.00	2.915	2.881	2.876	2.909	2.895	0.105	4.4688	0.1875	6421	154	6755	160	6877	76	7282	40	7130	20									
51		45.0	43	1250	42.00	2.916	2.883	2.877	2.910	2.897	0.104																					
51		60.0	43	1250	42.00	2.917	2.884	2.878	2.910	2.897	0.103			6425	152	6768	155	6882	75	7284	40	7130	20									
75	12:18	0.5	64	1800	64.00	2.839	2.791	2.786	2.835	2.813	0.187	4.4375	0.2188																			Frame noise when load applied
75		1.0	64	1800	64.00	2.838	2.790	2.786	2.834	2.812	0.188			6051	284	6430	273	6676	146	7148	88	7047	49									
75		2.0	64	1800	64.00	2.836	2.789	2.785	2.833	2.811	0.189																					
75		4.0	64	1800	64.00	2.836	2.787	2.784	2.832	2.810	0.190																					
75		8.0	64	1800	64.00	2.835	2.786	2.783	2.831	2.809	0.191			6056	282	6435	271	6672	147	7143	89	7041	51	3.19	0.19	3.19	0.19	3.19	0.19	3.19	0.19	
75		15.0	64	1800	64.00	2.834	2.785	2.782	2.830	2.808	0.192																					Increase from 1700 to 1800 psi
75		30.0	64	1800	64.00	2.826	2.785	2.773	2.824	2.802	0.198																					
75		45.0	64	1800	64.00	2.825	2.784	2.772	2.823	2.801	0.199																					
75		60.0	64	1800	64.00	2.824	2.783	2.771	2.821	2.800	0.200			6010	298	6402	283	6643	157	7122	97	7028	56	3.25	0.25	3.38	0.38	3.38	0.38	3.25	0.25	
75		75.0	64	1800	64.00	2.823	2.782	2.770	2.821	2.799	0.201																					
75		90.0	64	1800	64.00	2.822	2.782	2.769	2.820	2.798	0.202																					
100		0.5	85	2350	85.00	2.761	2.696	2.698	2.761	2.729	0.271	4.4063	0.2500	5730	397	6189	357	6485	212	7020	133	6957	80									
100		1.0	85	2350	85.00	2.759	2.695	2.697	2.760	2.728	0.272																					
100		2.0	85	2350	85.00	2.758	2.694	2.696	2.759	2.727	0.273																					
100		4.0	85	2350	85.00	2.757	2.691	2.694	2.759	2.725	0.275																					
100		8.0	85	2350	85.00	2.755	2.690	2.692	2.757	2.724	0.277																					
100		15.0	85	2350	85.00	2.754	2.689	2.690	2.755	2.722	0.278																					
100		30.0	85	2350	85.00	2.753	2.687	2.688	2.754	2.721	0.280																					
100		45.0	85	2350	85.00	2.752	2.685	2.687	2.752	2.719	0.281																					
100		60.0	85	2350	85.00	2.752	2.685	2.687	2.751	2.719	0.281			5737	395	6197	354	6470	217	7010	136	6947	83									
125	14:50	0.5	106	2900	107.00	2.672	2.590	2.599	2.680	2.635	0.365	4.4063	0.2500	5346	532	5971	433	6289	280	6892	178	6866	111									
125		1.0	106	2900	107.00	2.669	2.588	2.597	2.678	2.633	0.367																					
125		2.0	106	2900	107.00	2.667	2.586	2.595	2.676	2.631	0.369													3.25	0.25	3.19	0.19	3.19	0.19	3.25	0.25	
125		4.0	106	2900	107.00	2.665	2.584	2.595	2.676	2.630	0.370																					
125		8.0	106	2900	107.00	2.663	2.582	2.593	2.674	2.628	0.372																					

GZA GeoEnvironmental of New York
104 West 29th Street, New York, NY 10001

COMPRESSION PILE LOAD TEST DATA

PROJECT: Draper Hall
LOCATION: New York, New York
OWNER: Metropolitan Hospital
PILING CONTRACTOR: Posillico

Load Test No. Test Pile #2
Pile No. TP-2
Proj. Manager. Alireza Ayobian
Field Engineer Benjamin Cote

Pile Size: 14-inch OD x 77 ft long
Allowable Load: 85 tons
Jack #: WB-1811
Gauge #: WB-2136

Strain Gauge	SN 1512389	SN 1512380	SN 1512370	SN 1512359	SN 1511611
Calibration Factors	G (µ/d) 0.352	G (µ/d) 0.348	G (µ/d) 0.346	G (µ/d) 0.352	G (µ/d) 0.345
Initial Reading	R1 6858	R1 7214	R1 7098	R1 7397	R1 7189
Depth (ft-bgs)	2	40	60	70	77

Job#: 41.0162028.20
Date Start: 7/16/2015
Date End: 7/17/2015

% DL	ACT. TIME (Min.)	HOLD TIME (Min.)	PLANNED LOAD (Tons)	JACK GAUGE PRESSURE (psi)	ACTUAL LOAD (tons)	TEST PILE DISPLACEMENT READINGS: DIAL GAUGE 1 READ (in)	DIAL GAUGE 2 READ (in)	DIAL GAUGE 3 READ (in)	DIAL GAUGE 4 READ (in)	AVG READ (in.)	AVG DISP (in.)	Wire Mirror #1 Read (in.)	Wire Mirror #1 Displ (in.)	STRAIN GAUGE READINGS: STRAIN GAUGE 1 READ (digits)	STRAIN GAUGE 1 (delta micstrain)	STRAIN GAUGE 2 READ (digits)	STRAIN GAUGE 2 (delta micstrain)	STRAIN GAUGE 3 READ (digits)	STRAIN GAUGE 3 (delta micstrain)	STRAIN GAUGE 4 READ (digits)	STRAIN GAUGE 4 (delta micstrain)	STRAIN GAUGE 5 READ (digits)	STRAIN GAUGE 5 (delta micstrain)	REACTION PILE ELEVATION READINGS: Reaction Pile #1 Read (in)	Reaction Pile #1 Disp (in)	Reaction Pile #2 Read (in)	Reaction Pile #2 Disp (in)	Reaction Pile #3 Read (in)	Reaction Pile #3 Disp (in)	Reaction Pile #4 Read (in)	Reaction Pile #4 Disp (in)	COMMENTS
125		15.0	106	2900	107.00	2.662	2.580	2.591	2.672	2.626	0.374																					
125		30.0	106	2900	107.00	2.661	2.579	2.589	2.670	2.625	0.375																					
125		45.0	106	2900	107.00	2.647	2.563	2.574	2.657	2.610	0.390			5289	552	5940	443	6255	292	6880	182	6855	115									Increase 2800 to 2900 psi at 35 min
125	15:50	60.0	106	2900	107.00	2.645	2.561	2.573	2.656	2.609	0.391																					
125		75.0	106	2900	107.00	2.643	2.559	2.570	2.654	2.607	0.394																					
125		90.0	106	2900	107.00	2.642	2.558	2.569	2.654	2.606	0.394																					
125		105.0	106	2900	107.00	2.642	2.558	2.569	2.654	2.606	0.394																					
125	16:50	120.0	106	2900	107.00	2.641	2.557	2.569	2.653	2.605	0.395			5292	551	5950	440	6240	297	6869	186	6845	119									
151		0.5	128	3400	127.00	2.580	2.486	2.500	2.597	2.541	0.459																					
151		1.0	128	3400	127.00	2.575	2.480	2.493	2.590	2.535	0.466																					
151		2.0	128	3400	127.00	2.568	2.474	2.488	2.582	2.528	0.472	4.3281	0.3281																			
151		4.0	128	3400	127.00	2.566	2.472	2.486	2.581	2.526	0.474			4956	670	5750	509	6084	351	6772	220	6777	142	3.31	0.31	3.44	0.44	3.44	0.44	3.38	0.38	
151		8.0	128	3400	127.00	2.563	2.469	2.484	2.578	2.524	0.477																					
151		15.0	128	3400	127.00	2.562	2.469	2.483	2.577	2.523	0.477																					
151		30.0	128	3400	127.00	2.555	2.460	2.475	2.570	2.515	0.485																					increase from 3300 to 3400 at 18 min
151		45.0	128	3400	127.00	2.553	2.459	2.473	2.568	2.513	0.487																					
151		60.0	128	3400	127.00	2.552	2.457	2.472	2.567	2.512	0.488																					left pressure at 3300
151		75.0	128	3400	127.00	2.551	2.456	2.471	2.566	2.511	0.489													3.38		3.50	0.50	3.50	0.50	3.44		
151	18:23	90.0	128	3400	127.00	2.550	2.456	2.470	2.565	2.510	0.490			4945	673	5745	511	6061	359	6763	223	6769	145									
151		105.0	128	3400	127.00	2.550	2.455	2.470	2.565	2.510	0.490																					
151		120.0	128	3400	127.00	2.549	2.455	2.469	2.564	2.509	0.491																					
175		0.5	149	3950	148.37	2.468	2.363	2.381	2.485	2.424	0.576																					
175		1.0	149	3950	148.37	2.465	2.361	2.380	2.483	2.422	0.578	3.2813	1.3750																			wire caught on mirror
175		2.0	149	3950	148.37	2.463	2.359	2.378	2.482	2.421	0.580																					
175		4.0	149	3950	148.37	2.462	2.357	2.375	2.480	2.419	0.582																					
175		8.0	149	3950	148.37	2.461	2.355	2.373	2.479	2.417	0.583			4456	846	5524	588	5877	422	6654	262	6700	169	3.38		3.50	0.50	3.50	0.50	3.44	0.44	
175		15.0	149	3950	148.37	2.459	2.353	2.371	2.477	2.415	0.585																					
175		30.0	149	3950	148.37	2.457	2.351	2.369	2.474	2.413	0.587																					
175		45.0	149	3950	148.37	2.455	2.350	2.368	2.473	2.412	0.589																					
175		60.0	149	3950	148.37	2.455	2.349	2.367	2.472	2.411	0.589																					
175		75.0	149	3950	148.37	2.454	2.348	2.367	2.472	2.410	0.590			4460	844	5537	584	5875	423	6656	261	6699	169									
175		90.0	149	3950	148.37	2.453	2.348	2.367	2.472	2.410	0.590																					
175		105.0	149	3950	148.37	2.453	2.347	2.366	2.471	2.409	0.591																					
175		120.0	149	3950	148.37	2.452	2.347	2.365	2.471	2.409	0.591																					
200		0.5	170	4500	170.00	2.356	2.237	2.257	2.375	2.306	0.694																					
200		1.0	170	4500	170.00	2.354	2.235	2.255	2.374	2.305	0.696	3.1875	1.4688																			
200		2.0	170	4500	170.00	2.352	2.233	2.254	2.372	2.303	0.697																					
200		4.0	170	4500	170.00	2.338	2.218	2.238	2.358	2.288	0.712			3985	1011	5245	685	5645	503	6523	308	6614	198	3.38	0.38	3.50	0.50	3.50	0.50	3.50	0.50	
200		8.0	170	4500	170.00	2.333	2.213	2.235	2.355	2.284	0.716																					
200		15.0	170	4500	170.00	2.329	2.209	2.230	2.350	2.280	0.721																					
200		30.0	170	4500	170.00	2.318	2.196	2.217	2.337	2.267	0.733																					
200		45.0	170	4500	170.00	2.311	2.191	2.212	2.333	2.262	0.738	3.2500	1.4063	3971	1016	5237	688	5619	512	6512	312	6608	200									
200		60.0	170	4500	170.00	2.310	2.190	2.210	2.331	2.260	0.740	3.2500	1.4063	3976	1014	5242	686	5621	511	6511	312	6608	200	3.38	0.38	3.50	0.50	3.50	0.50	3.50	0.50	
200		120.0	170	4500	170.00	2.298	2.175	2.197	2.319	2.247	0.753																					

GZA GeoEnvironmental of New York
104 West 29th Street, New York, NY 10001

COMPRESSION PILE LOAD TEST DATA

PROJECT: Draper Hall
LOCATION: New York, New York
OWNER: Metropolitan Hospital
PILING CONTRACTOR: Posillico

Load Test No. Test Pile #2
Pile No. TP-2
Proj. Manager. Alireza Ayobian
Field Engineer Benjamin Cote

Pile Size: 14-inch OD x 77 ft long
Allowable Load: 85 tons
Jack #: WB-1811
Gauge #: WB-2136

Strain Gauge	SN 1512389	SN 1512380	SN 1512370	SN 1512359	SN 1511611
Calibration Factors	G (μ/d) 0.352	G (μ/d) 0.348	G (μ/d) 0.346	G (μ/d) 0.352	G (μ/d) 0.345
Initial Reading	R1 6858	R1 7214	R1 7098	R1 7397	R1 7189
Depth (ft-bgs)	2	40	60	70	77

Job#: 41.0162028.20
Date Start: 7/16/2015
Date End: 7/17/2015

% DL	ACT. TIME (Min.)	HOLD TIME (Min.)	PLANNED LOAD (Tons)	JACK GAUGE PRESSURE (psi)	ACTUAL LOAD (tons)	TEST PILE DISPLACEMENT READINGS: DIAL GAUGE 1 READ (in)	DIAL GAUGE 2 READ (in)	DIAL GAUGE 3 READ (in)	DIAL GAUGE 4 READ (in)	AVG READ (in.)	AVG DISP (in.)	Wire Mirror #1 Read (in.)	Wire Mirror #1 Displ (in.)	STRAIN GAUGE READINGS: STRAIN GAUGE 1 READ (digits)	STRAIN GAUGE 1 (delta micstrain)	STRAIN GAUGE 2 READ (digits)	STRAIN GAUGE 2 (delta micstrain)	STRAIN GAUGE 3 READ (digits)	STRAIN GAUGE 3 (delta micstrain)	STRAIN GAUGE 4 READ (digits)	STRAIN GAUGE 4 (delta micstrain)	STRAIN GAUGE 5 READ (digits)	STRAIN GAUGE 5 (delta micstrain)	REACTION PILE ELEVATION READINGS: Reaction Pile #1 Read (in)	Reaction Pile #1 Disp (in)	Reaction Pile #2 Read (in)	Reaction Pile #2 Disp (in)	Reaction Pile #3 Read (in)	Reaction Pile #3 Disp (in)	Reaction Pile #4 Read (in)	Reaction Pile #4 Disp (in)	COMMENTS
200		180.0	170	4500	170.00	2.292	2.171	2.191	2.313	2.242	0.758																					increased from 4400 to 4500 psi
200		240.0	170	4500	170.00	2.283	2.161	2.182	2.304	2.233	0.768																					
200		300.0	170	4500	170.00	2.281	2.159	2.180	2.303	2.231	0.769			3933	1030	5204	699	5581	525	6494	318	6595	205									
200		360.0	170	4500	170.00	2.275	2.152	2.173	2.295	2.224	0.776																					increased from 4400 to 4500 psi
200		420.0	170	4500	170.00	2.272	2.149	2.170	2.293	2.221	0.779	3.0938	1.5625	3907	1039	5182	707	5561	532	6482	322	6587	208									
200		480.0	170	4500	170.00	2.271	2.148	2.170	2.293	2.221	0.780																					
200		540.0	170	4500	170.00	2.270	2.148	2.169	2.292	2.220	0.780	3.0938	1.5625	3907	1039	5184	706	5556	534	6479	323	6583	209	3.38	0.38	3.56	0.56	3.50	0.50	3.50	0.50	increased from 4400 to 4500 psi
200	6:56	600.0	170	4500	170.00	2.264	2.141	2.163	2.286	2.214	0.787	3.0938	1.5625	3884	1047	5162	714	5548	536	6474	325	6582	210	3.38	0.38	3.75	0.75	3.56	0.56	3.50	0.50	
200	7:56	660.0	170	4500	170.00	2.263	2.139	2.161	2.284	2.212	0.788	3.0938	1.5625	3892	1044	5168	712	5547	537	6475	324	6582	210	3.44	0.44	3.63	0.63	3.56	0.56	3.50	0.50	
200	8:56	720.0	170	4500	170.00	2.260	2.137	2.158	2.281	2.209	0.791	3.0938	1.5625	3904	1040	5179	708	5551	535	6478	324	6583	209									
200	9:56	780.0	170	4500	170.00	2.260	2.137	2.159	2.282	2.210	0.791	3.0781	1.5781	3925	1033	5191	704	5556	533	6482	322	6586	208	3.44	0.44	3.56	0.56	3.56	0.56	3.44	0.44	increased from 4400 to 4500 psi
200	10:56	840.0	170	4500	170.00	2.253	2.130	2.150	2.274	2.202	0.798	3.0625	1.5938	3896	1043	5166	713	5547	537	6479	323	6587	208									
200	11:56	900.0	170	4500	170.00	2.251	2.128	2.149	2.272	2.200	0.800	3.0625	1.5938	3899	1041	5170	711	5548	536	6483	322	6589	207	3.44	0.44	3.56	0.56	3.56	0.56	3.53	0.53	
200	12:56	960.0	170	4500	170.00	2.250	2.127	2.148	2.271	2.199	0.801	3.0625	1.5938	3883	1047	51589	15443	5543	538	6480	323	6588	207	3.44	0.44	3.56	0.56	3.56	0.56	3.53	0.53	
200	13:56	1020.0	170	4500	170.00	2.248	2.124	2.145	2.268	2.196	0.804	3.0625	1.5938	3866	1053	5148	719	5534	541	6474	325	6582	209	3.44	0.44	3.56	0.56	3.56	0.56	3.53	0.53	
200	14:56	1080.0	170	4500	170.00	2.245	2.122	2.144	2.267	2.195	0.806	3.0625	1.5938	3853	1058	5143	721	5528	543	6468	327	6580	210									
200	15:56	1140.0	170	4500	170.00	2.244	2.121	2.143	2.266	2.194	0.807	3.0625	1.5938																			
200	16:56	1200.0	170	4500	170.00	2.243	2.119	2.142	2.265	2.192	0.808	3.0625	1.5938	3842	1062	5138	723	5517	547	6457	331	6570	214	3.44	0.44	3.56	0.56	3.56	0.56	3.50	0.50	
200	17:56	1260.0	170	4500	170.00	2.242	2.218	2.142	2.365	2.242	0.758	3.0625	1.5938	3835	1064	5137	723	5516	547	6458	331	6569	214	3.44	0.44	3.56	0.56	3.56	0.56	3.44	0.44	
200	18:56	1320.0	170	4500	170.00	2.240	2.111	2.138	2.340	2.207	0.793	3.1250	1.5313	3835	1064	5137	723	5516	547	6458	331	6570	214	3.44	0.44	3.56	0.56	3.50	0.50	3.44	0.44	cape struck piano wire
200	19:56	1380.0	170	4500	170.00	2.239	2.114	2.138	2.340	2.208	0.792	3.1406	1.5156	3821	1069	5132	725	5516	547	6460	330	6572	213	3.44	0.44	3.56	0.56	3.50	0.50	3.38	0.38	
200	20:56	1440.0	170	4500	170.00	2.237	2.113	2.140	2.341	2.208	0.792	3.1250	1.5313	3816	1071	5133	724	5517	547	6462	329	6574	212	3.38	0.38	3.50	0.50	3.50	0.50	3.50	0.50	
151	21:11	0.5	128	3500	130.00	2.279	2.163	2.187	2.381	2.253	0.748	3.1563	1.5000	4109	968	5358	646	5577	526	6481	322	6581	210	3.38	0.38	3.50	0.50	3.50	0.50	3.50	0.50	
151		1.0	128	3500	130.00	2.279	2.163	2.187	2.381	2.253	0.748	3.1563	1.5000											3.38	0.38	3.50	0.50	3.50	0.50	3.50	0.50	
151		2.0	128	3500	130.00	2.279	2.163	2.187	2.381	2.253	0.748	3.1563	1.5000											3.38	0.38	3.50	0.50	3.50	0.50	3.50	0.50	
151		4.0	128	3500	130.00	2.280	2.164	2.190	2.383	2.254	0.746	3.1563	1.5000											3.38	0.38	3.44	0.44	3.44	0.44	3.44	0.44	
151		8.0	128	3500	130.00	2.280	2.164	2.190	2.383	2.254	0.746	3.1563	1.5000	4110	967	5358	646	5577	526	6481	322	6581	210	3.38	0.38	3.44	0.44	3.44	0.44	3.44	0.44	
151		15.0	128	3500	130.00	2.280	2.164	2.190	2.383	2.254	0.746	3.1563	1.5000	4110	967	5358	646	5577	526	6481	322	6581	210	3.38	0.38	3.44	0.44	3.44	0.44	3.44	0.44	
151		30.0	128	3500	130.00	2.281	2.164	2.190	2.384	2.255	0.745	3.188	1.4688	4110	967	5358	646	5580	525	6484	321	6581	210	3.38	0.38	3.44	0.44	3.44	0.44	3.44	0.44	
151		45.0	128	3500	130.00	2.281	2.164	2.190	2.384	2.255	0.745	3.188	1.4688	4115	966	5358	646	5583	524	6487	320	6587	208	3.31	0.31	3.44	0.44	3.44	0.44	3.40	0.40	
151	22:13	60.0	128	3500	130.00	2.281	2.164	2.190	2.384	2.255	0.745	3.188	1.4688	4115	966	5358	646	5583	524	6487	320	6587	208	3.31	0.31	3.44	0.44	3.44	0.44	3.40	0.40	
100	22:19	0.5	85	2400	86.00	2.376	2.272	2.294	2.477	2.355	0.645	3.281	1.3750	4727	750	5797	493	5776	457	6570	291	6615	198	3.31	0.31	3.44	0.44	3.40	0.40	3.38	0.38	
100		1.0	85	2400	86.00	2.376	2.272	2.294	2.477	2.355	0.645	3.281	1.3750																			
100		2.0	85	2400	86.00	2.376	2.272	2.294	2.477	2.355	0.645	3.281	1.3750																			
100		4.0	85	2400	86.00	2.376	2.272	2.294	2.477	2.355	0.645	3.281	1.3750	4727	750	5797	493	5776	457	6570	291	6615	198	3.31	0.31	3.44	0.44	3.40	0.40	3.40	0.40	
100		8.0	85	2400	86.00	2.376	2.272	2.294	2.477	2.355	0.645	3.281	1.3750	4727	750	5797	493	5776	457	6570	291	6615	198	3.31	0.31	3.44	0.44	3.40	0.40	3.40	0.40	
100		15.0	85	2400	86.00	2.376	2.272	2.294	2.477	2.355	0.645	3.281	1.3750	4727	750	5797	493	5776	457	6570	291	6615	198	3.31	0.31	3.44	0.44	3.40	0.40	3.40	0.40	
100	22:50	30.0	85	2400	86.00	2.376	2.272	2.294	2.477	2.355	0.645	3.281	1.3750	4727	750	5797	493	5776	457	6570	291	6615	198	3.31	0.31	3.44	0.44	3.40	0.40	3.40	0.40	
100		45.0	85	2400	86.00	2.376	2.272	2.294	2.477	2.355	0.645	3.281	1.3750	4727	750	5797	493	5776	457	6570	291	6615	198	3.31	0.31	3.44	0.44	3.40	0.40	3.40	0.40	
100	23:20	60.0	85	2400	86.00	2.376	2.272	2.294	2.477	2.355	0.645	3.281	1.3750	4727	750	5797	493	5776	457	6570	291	6615	198	3.31	0.31	3.44	0.44	3.40	0.40	3.40	0.40	
51	23:25	0.5	43	1400	46.00	2.595	2.510	2.430	2.593	2.532	0.468	3.406	1.2500	5543	463	6267	330	6104	344	6713	241	6671	179	3.25	0.25	3.31	0.31	3.38	0.38	3.31	0.31	
51		1.0	43	1400	46.00																											
51		2.0	43	1400	46.00																											
51		4.0	43	1400	46.00																											

GZA GeoEnvironmental of New York
104 West 29th Street, New York, NY 10001

COMPRESSION PILE LOAD TEST DATA

PROJECT: Draper Hall
LOCATION: New York, New York
OWNER: Metropolitan Hospital
PILING CONTRACTOR: Posillico

Load Test No. Test Pile #2
Pile No. TP-2
Proj. Manager. Alireza Ayobian
Field Engineer Benjamin Cote

Pile Size: 14-inch OD x 77 ft long
Allowable Load: 85 tons
Jack #: WB-1811
Gauge #: WB-2136

Strain Gauge	SN 1512389	SN 1512380	SN 1512370	SN 1512359	SN 1511611
Calibration Factors	G (µ/d) 0.352	G (µ/d) 0.348	G (µ/d) 0.346	G (µ/d) 0.352	G (µ/d) 0.345
Initial Reading	R1 6858	R1 7214	R1 7098	R1 7397	R1 7189
Depth (ft-bgs)	2	40	60	70	77

Job#: 41.0162028.20
Date Start: 7/16/2015
Date End: 7/17/2015

% DL	ACT. TIME (Min.)	HOLD TIME (Min.)	PLANNED LOAD (Tons)	JACK GAUGE PRESSURE (psi)	ACTUAL LOAD (tons)	TEST PILE DISPLACEMENT READINGS								STRAIN GAUGE READINGS										REACTION PILE ELEVATION READINGS								COMMENTS
						DIAL GAGE 1 READ (in)	DIAL GAGE 2 READ (in)	DIAL GAGE 3 READ (in)	DIAL GAGE 4 READ (in)	AVG READ (in.)	AVG DISP (in.)	Wire Mirror #1 Read (in.)	Wire Mirror #1 Displ (in.)	STRAIN GAUGE 1 READ (digits)	STRAIN GAUGE 1 (delta micstrain)	STRAIN GAUGE 2 READ (digits)	STRAIN GAUGE 2 (delta micstrain)	STRAIN GAUGE 3 READ (digits)	STRAIN GAUGE 3 (delta micstrain)	STRAIN GAUGE 4 READ (digits)	STRAIN GAUGE 4 (delta micstrain)	STRAIN GAUGE 5 READ (digits)	STRAIN GAUGE 5 (delta micstrain)	Reaction Pile #1 Read (in)	Reaction Pile #1 Disp (in)	Reaction Pile #2 Read (in)	Reaction Pile #2 Disp (in)	Reaction Pile #3 Read (in)	Reaction Pile #3 Disp (in)	Reaction Pile #4 Read (in)	Reaction Pile #4 Disp (in)	
51		8.0	43	1400	46.00	2.596	2.511	2.431	2.594	2.533	0.467	3.406	1.2500	5543	463	6267	330	6104	344	6713	241	6671	179	3.25	0.25	3.31	0.31	3.38	0.38	3.31	0.31	
51		15.0	43	1400	46.00	2.595	2.511	2.431	2.595	2.533	0.467	3.406	1.2500	5543	463	6267	330	6104	344	6713	241	6671	179	3.25	0.25	3.31	0.31	3.38	0.38	3.31	0.31	
51	23:55	30.0	43	1400	46.00	2.595	2.511	2.431	2.596	2.533	0.467	3.406	1.2500	5543	463	6267	330	6104	344	6713	241	6671	179	3.25	0.25	3.31	0.31	3.38	0.38	3.31	0.31	
51		45.0	43	1400	46.00	2.595	2.511	2.431	2.596	2.533	0.467	3.406	1.2500	5543	463	6267	330	6104	344	6713	241	6671	179	3.25	0.25	3.31	0.31	3.38	0.38	3.31	0.31	
51	0:25	60.0	43	1400	46.00	2.595	2.511	2.431	2.596	2.533	0.467	3.406	1.2500	5543	463	6267	330	6104	344	6710	242	6671	179	3.25	0.25	3.31	0.31	3.38	0.38	3.31	0.31	
0	0:34	0.5	0	0	0.00	2.709	2.676	2.729	2.846	2.740	0.260	3.688	0.9688	6791	24	7095	41	6759	117	7116	99	6900	100	2.94	-0.06	2.94	-0.06	2.88	-0.13	2.94	-0.06	Hydrolic Jack disconnected
0		1.0	0	0	0.00																											
0		2.0	0	0	0.00																											
0		4.0	0	0	0.00	2.710	2.676	2.729	2.845	2.740	0.260	3.688	0.9688																			
0		8.0	0	0	0.00																											
0	0:50	15.0	0	0	0.00	2.712	2.676	2.729	2.844	2.740	0.260	3.688	0.9688	6790	24	7096	41	6763	116	7118	98	6903	99	2.94	-0.06	2.94	-0.06	2.88	-0.13	2.94	-0.06	
0		30.0	0	0	0.00																											
0		45.0	0	0	0.00	2.716	2.681	2.730	2.843	2.743	0.258	3.672	0.9844	6790	24	7097	41	6767	115	7119	98	6904	98	2.94	-0.06	2.94	-0.06	2.94	-0.06	2.94	-0.06	
0	1:40	60.0	0	0	0.00	2.716	2.681	2.730	2.842	2.742	0.258	3.672	0.9844	6787	25	7096	41	6765	115	7119	98	6904	98	2.94	-0.06	2.94	-0.06	2.94	-0.06	2.94	-0.06	

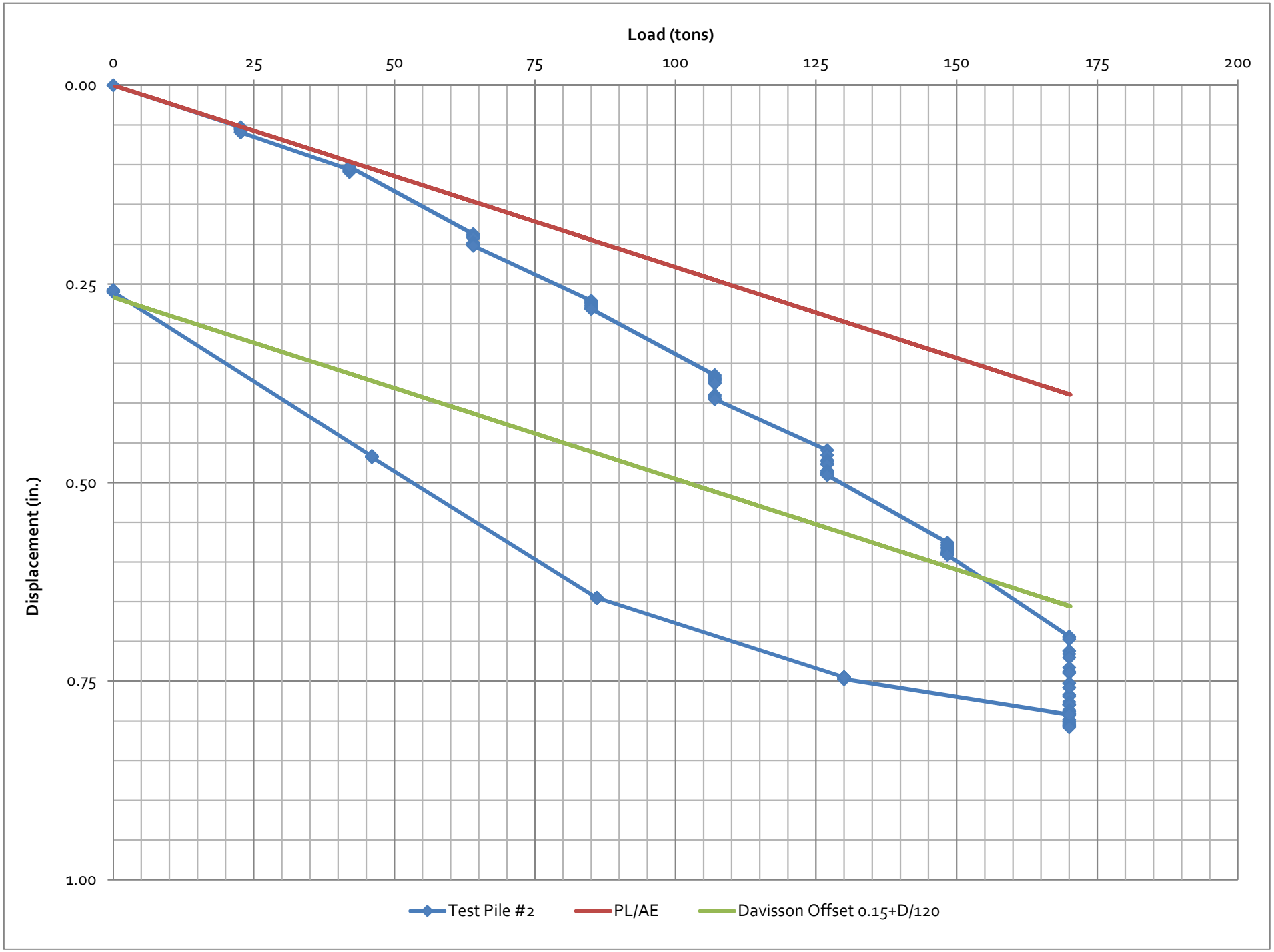
Load (tons)
0
25
50
75
100
125
150
175
200
0.00
0.25
0.50
0.75
1.00
Displacement (in.)
Test Pile #2
PL/AE
Davisson Offset 0.15+D/120